ADDITION AND RENOVATIONS TO :

McKnight Road
Church of Christ

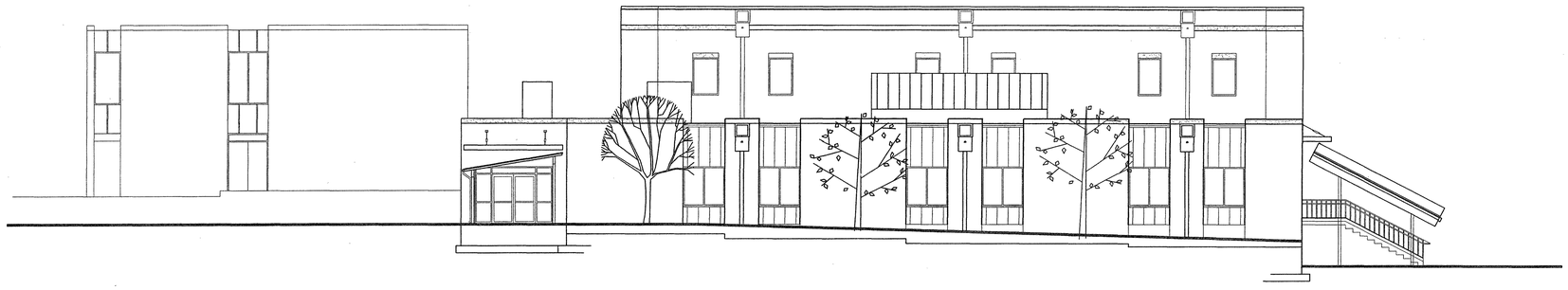

DRAWING INDEX :

CS	COVER SHEET
1/1	TOPOGRAPHICAL SURVEY
C1	SITE DEMOLITION PLAN
C2	SITE PLAN
C3	SITE IMPROVEMENT PLAN
C4	DRAINAGE AREA MAP
C5	SITE PLAN DETAILS
L1	LANDSCAPE PLAN
L2	PLANT LIST/DETAILS
A0.01	GENERAL INFORMATION
A0.02	PARTION TYPES & SECTIONS
A0.03	LIFE SAFETY PLAN
A2.00	NOT USED
A2.01	FIRST FLOOR PLAN
A2.02	SECOND FLOOR PLAN
A2.03	ROOF PLAN / DETAILS
A3.00	BUILDING DEMOLITION ELEVATIONS AND PLANS
A3.01	BUILDING ELEVATIONS
A3.02	BUILDING ELEVATIONS/SECTIONS
A3.03	BUILDING SECTIONS
A3.04	SECTION
A3.05	NOT USED
A3.06	NOT USED
A4.01	ENLARGED PLANS
A4.02	ENLARGED PLAN/TOILET ELEVATIONS
A6.01	FIRST & SECOND FLOOR REFLECTED CEILING PLAN
A6.02	NOT USED
A8.01	WALL SECTIONS
A8.02	DETAILS
A8.03	DETAILS/SECTIONS
A8.05	NOT USED
A9.01	ROOM FINISH SCHEDULE
A9.02	DOOR SCHEDULE
S1.0	GENERAL INFORMATION
S1.1	STRUCTURAL DETAILS (TYPICAL)
S2.0	FOUNDATION/FIRST FLOOR PLAN
S2.1	ROOF FRAMING PLAN
S2.2	CANOPY AND ELEVATION PLAN
S3.0	FOUNDATION DETAILS
S4.0	FRAMING DETAILS
S4.1	FRAMING DETAILS
S4.2	FRAMING DETAILS
S5.0	BRACE ELEVATIONS AND DETAILS
FS1	FOOD SERVICE EQUIPMENT PLAN & SCHEDULES
FS2	FOOD SERVICE EQUIPMENT PLAN & SCHEDULES
MD1.1	MECHANICAL FIRST & SECOND FLOOR DEMOLITION PLAN
M1.1	MECHANICAL FIRST FLOOR PLAN
M2.1	MECHANICAL SECOND FLOOR PLAN
M3.1	MECHNICAL ROOF PLAN
M4.1	MECHNICAL SCHEDULES AND DETAILS
PD1.1	PLUMBING FIRST & SECOND FLOOR DEMOLITION PLAN
P1.1	PLUMBING FIRST FLOOR PLAN-WASTE AND VENT
P1.2	PLUMBING FIRST FLOOR PLAN- DOMESTIC WATER
P3.1	PLUMBING FIXTURE SCHEDULES
ED1.1	ELECTRICAL FIRST & SECOND FLOOR DEMOLITION PLAN-LIGHTING
E0.1	ELECTRICAL SITE PLAN
E1.1	ELECTRICAL FIRST FLOOR PLAN- LIGHTING
E1.2	CANOPY PLAN-LIGHTING
E1.3	ELECTRICAL FIRST FLOOR PLAN-POWER AND SYSTEMS
E2.1	RISER AND SCHEDULES
E3.0	PANEL SCHEDULES-ENLARGED KITCHEN PLAN
E3.1	MOTOR & EQUIPMENT SCHEDULES & DIAGRAMS

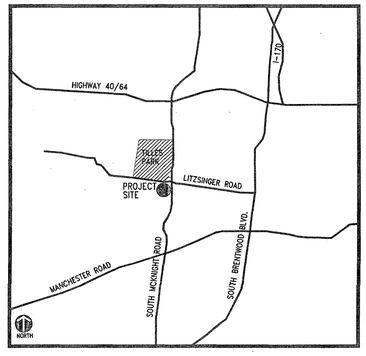

SITE LOCATION MAP:
NTS

#2

CONSTRUCTION/BID DRAWINGS

Fletcher:: Architects, Inc.

ARCHITECTURE ■ PLANNING ■ INTERIORS
1906 NORTH SIGNAL HILLS DRIVE
KIRKWOOD, MO. 63122
TEL. (314) 965-6333
FAX. (314) 965-8997
info@fletcher-architects.com

CONSULTANTS

CIVIL ENGINEER:
FRONTENAC ENGR. GROUP, INC.
16 SUNNEN DR.
ST. LOUIS, MO 63143
PHONE (314) 644-2200
FAX (314) 644-0645

STRUCT. ENGINEER:
ABS CONSULTING
1648 LACKLAND HILLS PARKWAY
ST. LOUIS, MO 63146
PHONE (314) 994-7007
FAX (314) 994-0722

M.E.P. ENGINEER:
SSC ENGINEERING
550 SPIRIT OF ST. LOUIS BLVD.
CHESTERFIELD, MO 63005
PHONE (636) 530-7770
FAX (636) 530-7877

HARDWARE CONSULTANT
STO
5656 PIERRE CT.
ST. LOUIS, MO 63128
PHONE (314) 487-7776
FAX (314) 842-2342

KITCHEN CONSULTANTS
THE GEISER GROUP
3501 WATSON ROAD
ST. LOUIS, MO 63139
PHONE (314) 645-2087
FAX (314) 645-3308

LANDSCAPE ARCHITECT
AUSTIN TAO. AND ASSOC.
2101 LOCUST, 2ND. FLOOR
ST. LOUIS, MO 63103
PHONE (314) 436-3099
FAX (314) 436-9130

INTERIOR DESIGN
OTOOLE DESIGN ASSOC.
124 WEST JEFFERSON
KIRKWOOD, MO 63122
PHONE (314) 909-1905
FAX (314) 909-1906

PROJECT:
ADDITION AND RENOVATIONS TO
McKnight Road
Church of Christ
2515 SOUTH MCKNIGHT ROAD
ST. LOUIS, MO 63124

THE SEAL AND SIGNATURES APPLY ONLY TO THE DOCUMENT AS ORIGINALLY PREPARED AND WE EXPRESSLY DISCLAIM ANY RESPONSIBILITY FOR ALL OTHER PLANS, SPECIFICATIONS, ESTIMATES, REPORTS, OR OTHER DOCUMENTS OR INSTRUMENTS RELATING TO OR INTENDED TO BE USED FOR ANY PART OR PARTS OF THE PROJECT.

COPYRIGHT 2002 FLETCHER ARCHITECTS, INC.

NO	DATE	REVISIONS
	00/00/01	ADDENDUM #0

PROJECT NO. 01403
DRAWN BY: SER
CHECKED BY: MEF
DATE: NOVEMBER 1, 2002

SHEET NO. CS

CONSTRUCTION/BID DRAWINGS

TOPOGRAPHIC SURVEY

PART OF LOT 9 OF THE CHARLEVILLE FARM IN U.S. SURVEY 1930 TOWNSHIP 45 NORTH RANGE 6 EAST
ST. LOUIS COUNTY, MISSOURI

LEGEND

● IRON PIN FOUND	○ IRON PIN SET
■ CONC. MON. FOUND	□ CONC. MON SET
⊕ PK NAIL FOUND	⊕ PK NAIL SET
⊠ CHISELED "X" FOUND	⊠ CHISELED "X" SET
▲ STONE FOUND	⸸ ANCHOR FOUND
● FENCE POST	⊗ OLD REBAR FOUND
(R)RECORD	(M)MEASURED

EXISTING STRUCTURE
CONCRETE
ASPHALT
GRAVEL
GRASS
W — WATER SERVICE
E — ELECTRIC SERVICE
G — GAS SERVICE
T — TELEPHONE SERVICE
SAN — EX. SANITARY SEWER
STM — EX. STORM SEWER
PROPOSED SANITARY SEWER
PROPOSED STORM SEWER
(500) — EXISTING CONTOUR
(500) — PROPOSED CONTOUR
x 500.00 — EXISTING ELEVATION
(500.00) — PROPOSED ELEVATION
POWER POLE
GUY WIRE
LIGHT STANDARD
WATER METER
WATER VALVE
FIRE HYDRANT
GAS METER
GRATED INLET
CURB/AREA INLET
MANHOLE
SIGN
HANDICAP
SPRINKLER HEAD
SPRINKLER CONTROL BOX
DOORWAY ENTRANCE
DIRECTION OF TRAFFIC
PIPE BOLLARD
MAIL BOX

ABBREVIATIONS

PL	PROPERTY LINE
CL	CENTERLINE
FL	FLOWLINE
ROW	RIGHT OF WAY
P.B.	PLAT BOOK
D.B.	DEED BOOK
TBR	TO BE REMOVED
UIP	USE IN PLACE
CO	CLEANOUT
DS	DOWNSPOUT
EP	EDGE OF PAVEMENT
FF	FINISHED FLOOR
FG	FINISHED GRADE
GL	GUTTERLINE
LS	LIGHT STANDARD
TC	TOP OF CURB
TP	TOP OF PAVEMENT
TW	TOP OF WALK
AI	AREA INLET
GI	GRATE INLET
CI	CURB INLET
MH	MANHOLE
TB	TOP OF BANK
TS	TOE OF SLOPE
CMP	CORRUGATED METAL PIPE
PVC	POLYVINYL CHLORIDE PIPE
RCP	REINFORCED CONCRETE PIPE
BW	BOTTOM OF WALL
TI	TOP OF ISLAND
TG	TOP OF GRADE
CC	CANOPY CLEARANCE
EX	EXISTING

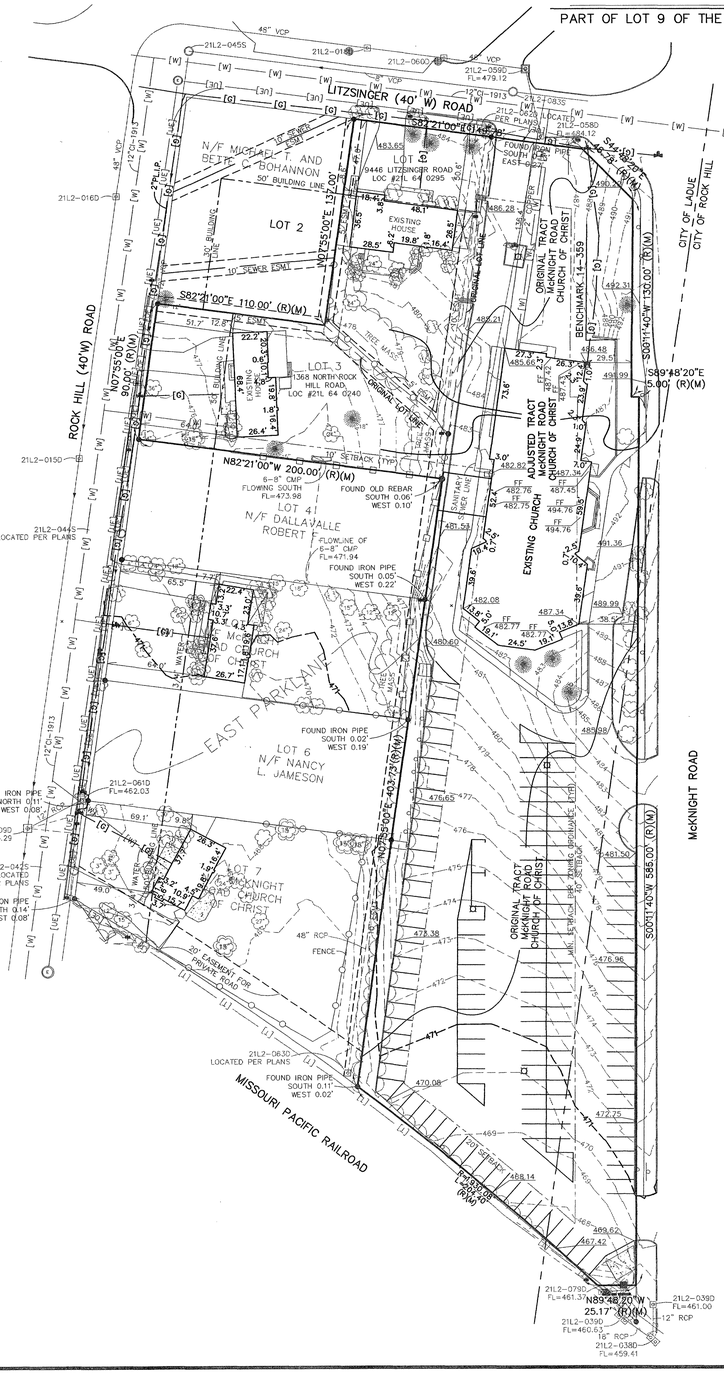

NOTE: IT IS NOT WARRANTED THAT THIS PLAT CONTAIN COMPLETE INFORMATION REGARDING EASEMENTS, RESERVATIONS, RIGHTS OF WAY, BUILDING LINES, AND OTHER ENCUMBRANCES. FOR COMPLETE INFORMATION, A TITLE OPINION OR COMMITMENT FOR TITLE INSURANCE SHOULD BE OBTAINED.

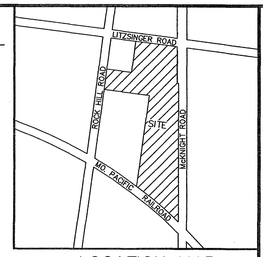

LOCATION MAP
(Not To Scale)

ORIGINAL TRACT

PROPERTY DESCRIPTION

ORIGINAL TRACT
PART OF LOT 9 OF THE CHARLEVILLE FARM IN U.S. SURVEY 1930 TOWNSHIP 45 NORTH RANGE 6 EAST AND DESCRIBED AS FOLLOWS, TO WIT: BEGINNING AT AN IRON PIPE SET AT THE INTERSECTION OF THE SOUTH LINE OF LITZSINGER ROAD AND THE SOUTHWEST LINE OF PROPERTY CONVEYED TO THE COUNTY OF ST. LOUIS, FOR THE ESTABLISHMENT OF McKNIGHT ROAD, BY DEED RECORDED IN BOOK 4271 PAGE 429; THENCE FOLLOWING THE SOUTHWEST, WESTERN AND SOUTHERN LINES OF SAID PROPERTY CONVEYED TO THE COUNTY OF ST. LOUIS, THE FOLLOWING COURSES AND DISTANCES, SOUTH 45 DEGREES 14 MINUTES EAST 46.87 FEET, SOUTH 00 DEGREES 14 MINUTES EAST 130 FEET, NORTH 89 DEGREES 46 MINUTES EAST, 5 FEET, SOUTH 00 DEGREES 14 MINUTES EAST, 585 FEET, SOUTH 89 DEGREES 46 MINUTES WEST 25.17 FEET TO AN IRON PIPE SET IN THE NORTHEAST LINE OF THE MISSOURI PACIFIC RAILROAD RIGHT OF WAY; THENCE NORTHWEST ALONG THE NORTHEAST LINE OF SAID RAILROAD RIGHT OF WAY ALONG A CURVE TO THE LEFT HAVING A RADIUS OF 1930.08 FEET A DISTANCE 204.40 FEET TO AN IRON PIPE SET IN THE EAST LINE OF EAST PARKLANE, A SUBDIVISION, ACCORDING TO PLAT THEREOF RECORDED IN PLAT BOOK 55 PAGE 43, OF THE ST. LOUIS COUNTY RECORDS; THENCE NORTH 7 DEGREES 29 1/3 MINUTES EAST 630.73 FEET ALONG THE EAST LINE OF SAID SUBDIVISION TO AN IRON PIPE SET IN THE SOUTH LINE OF LITZSINGER ROAD; THENCE SOUTH 82 DEGREES 50 MINUTES EAST ALONG THE SOUTH LINE OF SAID ROAD, 56.70 FEET TO THE POINT OF BEGINNING, ACCORDING TO A SURVEY THEREOF EXECUTED BY CLAYTON SURVEYING AND ENGINEERING COMPANY DURING THE MONTH OF OCTOBER, 1963.

ORIGINAL TRACT TOTAL AREA

98,628 SQUARE FEET
OR
2.26 ACRES

ADJUSTED TRACT

PROPERTY DESCRIPTION

ADJUSTED TRACT:
PART OF LOT 9 OF THE CHARLEVILLE FARM IN U.S. SURVEY 1930 TOWNSHIP 45 NORTH RANGE 6 EAST AND DESCRIBED AS FOLLOWS: BEGINNING AT AN IRON PIPE SET AT THE INTERSECTION OF THE SOUTH LINE OF LITZSINGER ROAD AND THE SOUTHWEST LINE OF PROPERTY CONVEYED TO THE COUNTY OF ST. LOUIS, FOR THE ESTABLISHMENT OF McKNIGHT ROAD, BY DEED RECORDED IN BOOK 4271 PAGE 429; THENCE SOUTH 44 DEGREES 48 MINUTES 20 SECONDS EAST, A DISTANCE OF 46.78 FEET TO A POINT; THENCE SOUTH 00 DEGREES 11 MINUTES 40 SECONDS WEST, A DISTANCE OF 130.00 FEET TO A POINT; THENCE SOUTH 89 DEGREES 48 MINUTES 20 SECONDS EAST, A DISTANCE OF 5.00 FEET TO A POINT; THENCE SOUTH 00 DEGREES 11 MINUTES 40 SECONDS WEST, A DISTANCE OF 585.00 FEET TO POINT; THENCE NORTH 89 DEGREES 48' MINUTES 20 SECONDS WEST, A DISTANCE OF 25.17 FEET TO A POINT ON THE NORTHERN LINE OF MISSOURI PACIFIC RAILROAD; THENCE ALONG SAID RAILROAD ON A CURVE-TO THE LEFT HAVING A RADIUS OF 1930.08 FEET, A CHORD WHICH BEARS NORTH 49 DEGREES 59 MINUTES 24 SECONDS WEST, A CHORD DISTANCE OF 204.30, A LENGTH OF 204.40 FEET TO A POINT BEING THE SOUTHEAST CORNER OF LOT 7 OF EAST PARKLANE AS PER PLAT BOOK 55 PAGE 43 OF THE ST. LOUIS COUNTY, MISSOURI RECORDS; THENCE CONTINUING ALONG SAID RAILROAD, ALSO BEING THE SOUTHERN LINE OF SAID LOT 7, ALONG A CURVE TO THE LEFT HAVING A RADIUS OF 2134.80 FEET, A CHORD WHICH BEARS NORTH 56 DEGREES 05 MINUTES 39 SECONDS WEST, A CHORD DISTANCE OF 222.50 FEET, A LENGTH OF 222.60 FEET TO A POINT ON THE EAST LINE OF ROCK HILL (40' W) ROAD, SAID POINT ALSO BEING THE SOUTHWEST CORNER OF SAID LOT 7; THENCE LEAVING SAID RAILROAD AND ALONG SAID EAST LINE OF ROCK HILL (40' W) ROAD, NORTH 07 DEGREES 55 MINUTES 00 SECONDS EAST, A DISTANCE OF 65.30 FEET TO A POINT BEING THE SOUTHWEST CORNER OF LOT 6 OF SAID EAST PARKLANE SUBDIVISION; THENCE LEAVING SAID EAST LINE OF ROCK HILL (40' W) ROAD, SOUTH 82 DEGREES 21 MINUTES 00 SECONDS EAST, A DISTANCE OF 200.00 FEET TO A POINT BEING THE SOUTHEAST CORNER OF SAID LOT 6; THENCE NORTH 07 DEGREES 55 MINUTES 00 SECONDS EAST, A DISTANCE OF 80.00 FEET TO A POINT BEING NORTHEAST CORNER OF SAID LOT 6; THENCE NORTH 82 DEGREES 21 MINUTES 00 SECONDS WEST A DISTANCE OF 200.00 FEET TO A POINT ON SAID EAST LINE OF ROCK HILL (40' W) ROAD, SAID POINT ALSO BEING THE NORTHWEST CORNER OF SAID LOT 6; THENCE ALONG SAID EAST LINE OF ROCK HILL (40' W) ROAD NORTH 07 DEGREES 55 MINUTES 00 SECONDS EAST, A DISTANCE OF 80.00' FEET TO A POINT BEING THE SOUTHWEST CORNER OF LOT 4 OF SAID EAST PARKLANE SUBDIVISION; THENCE LEAVING SAID EAST LINE OF ROCK HILL (40' W) ROAD SOUTH 82 DEGREES 21 MINUTES 00 SECONDS EAST, A DISTANCE OF 200.00' FEET TO POINT BEING THE SOUTHEAST CORNER OF SAID LOT 4; THENCE NORTH 07 DEGREES 55 MINUTES 00 SECONDS EAST, A DISTANCE OF 80.00 FEET TO A POINT BEING THE NORTHEAST CORNER OF SAID LOT 4; THENCE NORTH 82 DEGREES 21 MINUTES 00 SECONDS WEST, A DISTANCE OF 200.00 FEET TO A POINT ON SAID EAST LINE OF ROCK HILL (40' W) ROAD; THENCE ALONG SAID EAST LINE OF ROCK HILL (40' W) ROAD NORTH 07 DEGREES 55 MINUTES 00 SECONDS EAST, A DISTANCE OF 90.00 FEET TO POINT BEING SOUTHWEST CORNER OF LOT 2 OF SAID EAST PARKLANE SUBDIVISION; THENCE LEAVING SAID EAST LINE OF ROCK HILL (40' W) ROAD SOUTH 82 DEGREES 21 MINUTES 00 SECONDS EAST, A DISTANCE OF 110.00 FEET TO A POINT BEING THE SOUTHEAST CORNER OF SAID LOT 2; THENCE NORTH 07 DEGREES 55 MINUTES 00 SECONDS EAST, A DISTANCE OF 137.00 FEET TO A POINT ON THE SOUTH LINE OF LITZSINGER (40' W) ROAD; THENCE ALONG SAID SOUTH LINE OF LITZSINGER (40' W) ROAD SOUTH 82 DEGREES 21 MINUTES 00 SECONDS EAST, A DISTANCE OF 149.78 FEET TO THE POINT OF BEGINNING.

ADJUSTED TRACT TOTAL AREA

167,431 SQUARE FEET
OR
3.84 ACRES

BENCHMARK INFORMATION

14-359 493.09 – "L" ON THE NORTHEAST CORNER AT THE NORTH END OF A RETAINING WALL AT THE CHURCH OF CHRIST; 50' WEST OF THE CENTERLINE OF McKNIGHT ROAD AND 200' SOUTH OF THE CENTERLINE OF LITZSINGER ROAD.

14-31 507.30 – RM 416 FEMA PANEL 301; "SQ." ON SOUTHEAST CORNER OF THIRD CONCRETE STEP ON SOUTH SIDE OF FRONT YARD ENTRANCE TO HOUSE AT #1101 N. ROCK HILL ROAD.

BASE FLOOD ELEVATION

— — — 471 — — — BASE FLOOD ELEVATION LINE; ELEVATION IN FEET

BASIS OF BEARING

BEARINGS ARE BASED ON THE EASTERN LINE OF ROCK HILL (40' W) ROAD OF EAST PARKLANE AS RECORDED IN PLAT BOOK 55, PAGE 43 OF THE ST. LOUIS COUNTY, MISSOURI RECORDS, SAID BEARING BEING NORTH 07 DEGREES 55 MINUTES 00 SECONDS EAST.

GENERAL NOTES

1. BUILDING LINES AND SETBACKS ARE FROM EAST PARKLANE AS RECORDED IN PLAT BOOK 55, PAGE 43 OF THE ST. LOUIS COUNTY, MISSOURI RECORDS AND ZONING ORDINANCES OF THE CITY OF LADUE, MISSOURI.

SURVEYOR'S CERTIFICATE

THIS IS TO CERTIFY THAT SHERRILL ASSOCIATES, INC. AT THE REQUEST AND FOR THE EXCLUSIVE USE OF McKNIGHT ROAD CHURCH CHURCH OF CHRIST, ST. LOUIS, MO., HAS PERFORMED THIS BOUNDARY ADJUSTMENT PLAT FROM RECORD SOURCES AND ACTUAL FIELD SURVEYS IN ACCORDANCE WITH THE RULES OF THE MISSOURI BOARD FOR ARCHITECTS, PROFESSIONAL ENGINEERS AND LAND SURVEYORS (4 CSR 30-16.030 REVISED 12/30/94). ALL LINEAR AND ANGULAR VALUES SHOWN ARE BASED UPON DEED OR RECORD INFORMATION UNLESS OTHERWISE NOTED.

STATE OF MISSOURI
JERRY L. WILLIAMS
NUMBER LS-2030
PROFESSIONAL LAND SURVEYOR

DATE: 3/21/02 JERRY L. WILLIAMS, MISSOURI PROFESSIONAL LAND SURVEYOR

Title: TOPOGRAPHIC SURVEY
McKNIGHT ROAD CHURCH OF CHRIST
ST. LOUIS, MO. 63124

Client: McKNIGHT ROAD CHURCH OF CHRIST
LARRY YORK CHAIRMAN BUILDING COMMITTEE
2515 SOUTH McKNIGHT ROAD
ST. LOUIS, MO 63124

SHERRILL ASSOCIATES
Consulting Engineers and Land Surveyors
In Missouri:
2727 Telegraph Road
St. Louis, MO 63129
Ph: (314) 487-5900
Fax: (314) 487-3365
In Illinois:
#20 Edwardsville Professional Park Suite C
Edwardsville IL 62025
E-Mail: Sherrill@cns.com
Corporate Web Site: www.SherrillAssoc.com

DISCLAIMER OF RESPONSIBILITY
I hereby specify that the documents intended to be authenticated by my seal are limited to this sheet, and I hereby disclaim any responsibility for all other Drawings, Specifications, Estimates, Reports or other Documents or instruments relating to or intended to be used for any part or parts of the engineering project or survey.

NO.	DATE	REVISION

PROJECT NO. 23797
DRAWN JLK | CHECKED JLW
DATE 3/25/2002
SHEET 1 OF 1

Fletcher:: Architects, Inc.
ARCHITECTURE ■ PLANNING ■ INTERIORS
1906 NORTH SIGNAL HILLS DRIVE
KIRKWOOD, MO. 63122
TEL. (314) 965-6333
FAX. (314) 965-8997
info@fletcher-architects.com

CONSULTANTS

CIVIL ENGINEER:
FRONTENAC ENGR. GROUP, INC.
16 SUNNEN DR.
ST. LOUIS, MO 63143
PHONE (314) 644-2200
FAX (314) 644-0845

STRUCT. ENGINEER:
ABS CONSULTING
1648 LACKLAND HILLS PARKWAY
ST. LOUIS, MO 63146
PHONE (314) 994-7007
FAX (314) 994-0722

M.E.P. ENGINEER:
SSC ENGINEERING
660 SPIRIT OF ST. LOUIS BLVD.
CHESTERFIELD, MO 63005
PHONE (636) 530-7770
FAX (636) 530-7977

HARDWARE CONSULTANT
8710
6565 PIERRE CT.
ST. LOUIS, MO 63128
PHONE (314) 487-7776
FAX (314) 845-2248

KITCHEN CONSULTANTS
THE GEISER GROUP
3501 WATSON ROAD
ST. LOUIS, MO 63139
PHONE (314) 645-2987
FAX (314) 645-3808

LANDSCAPE ARCHITECT
AUSTIN TAO. AND ASSOC.
2101 LOCUST, 2ND. FLOOR
ST. LOUIS, MO 63103
PHONE (314) 436-3998
FAX (314) 436-9150

INTERIOR DESIGN
OTOOLE DESIGN ASSOC.
124 WEST JEFFERSON
KIRKWOOD, MO 63122
PHONE (314) 909-8206
FAX (314) 909-1908

PROJECT: ADDITION AND RENOVATIONS TO McKnight Road Church of Christ
2515 SOUTH MCKNIGHT ROAD
ST. LOUIS, MO 63124

THE SEAL AND SIGNATURES APPLY ONLY TO THE DOCUMENT TO WHICH THEY ARE AFFIXED, AND WE EXPRESSLY DISCLAIM ANY RESPONSIBILITY FOR ALL OTHER PLANS, SPECIFICATIONS, ESTIMATES, REPORTS, OR OTHER DOCUMENTS OR INSTRUMENTS RELATING TO OR INTENDED TO BE USED FOR ANY PART OR PARTS OF THE PROJECT.

COPYRIGHT 2002 FLETCHER ARCHITECTS, INC.

NO	DATE	REVISIONS
	00/00/01	ADDENDUM #0

PROJECT NO. 01403
SHEET NO. 1/1
DRAWN BY: SER
CHECKED BY: MEF
DATE: NOVEMBER 1, 2002

CONSTRUCTION/BID DRAWINGS



SITE DEMOLITION PLAN

Scale 1" = 20'

DEMOLITION KEYED NOTES:

1. LIMITS OF SITE DEMOLITION WORK. ALL TREES/VEGETATION & PAVEMENT, BUILDINGS AND IMPROVEMENTS WITHIN THE LIMITS T.B.R. UNLESS NOTED OTHERWISE.
2. INSTALL SILTATION CONTROL FENCE PRIOR TO ANY REMOVALS OR GRADING.
3. REMOVE EXISTING STRUCTURES, AND ALL RELATED IMPROVEMENTS, AND DISPOSE OF WASTE MATERIALS OFF SITE. ABANDON ALL EXISTING UTILITY SERVICES, AND DESTROY TAPS, IN ACCORDANCE WITH THE RESPECTIVE UTILITY'S INSTRUCTIONS.
4. TREE TO BE PROTECTED AND SAVED.
5. EXISTING LIGHT T.B.R.
6. EXISTING SANITARY LATERAL TO BE DISCONNECTED AND TIED INTO NEW SANITARY LATERAL WHEN IT IS COMPLETED. REMOVE EXISTING LATERAL BELOW PROPOSED BUILDING, ABANDON IN PLACE OTHERWISE DESTROY TAP. CONTRACTOR TO MAINTAIN SANITARY SERVICE TO EXISTING BLDG. @ ALL TIMES.
7. REBUILD EXISTING WATER METER BOX @ PROPOSED GRADES.
8. REMOVE AND DISPOSE OF OFF SITE, EXISTING PAVING. COORDINATE WITH OWNER THE LIMITS OF REMOVAL TO MINIMIZE THE IMPACT TO BUILDING ACCESS.
9. EXISTING STAIRS T.B.R.
10. EXISTING TRASH ENCLOSURE T.B.R.
11. REMOVE EXISTING 6' WOOD FENCE (TO BE REPLACED w/ SIMILAR FENCE 8' TALL).
12. ORANGE SAFETY FENCING. AT CONTRACTOR'S OPTION, AND EXPENSE, CHAIN LINK SECURITY FENCING MAY BE SUBSTITUTED. FENCING TO REMAIN INPLACE FOR DURATION OF CONSTRUCTION. PROVIDE MOVEABLE GATES AS NEEDED FOR CONSTRUCTION ACCES.

DEMOLITION LEGEND:

= REMOVE EXISTING STRUCTURES, AND ALL RELATED IMPROVEMENT, AND DISPOSE OF WASTE MATERIALS OFF SITE. EXISTING FOUNDATION T.B.R. & DISPOSED OF OFF SITE. ABANDON ALL EXISTING UTILITY SERVICES, AND DESTROY TAPS, IN ACCORDANCE WITH THE RESPECTIVE UTILITY'S INSTRUCTION.

= REMOVE AND DISPOSE OF EXISTING TREES AND STUMPS.

= LIMITS OF SITE DEMOLITION WORK.

= ORANGE SAFETY FENCING.

M.S.D. P# 24741
M.S.D. BASE MAP 21-L2

Fletcher:: Architects, Inc.

ARCHITECTURE ■ PLANNING ■ INTERIORS
1906 NORTH SIGNAL HILLS DRIVE
KIRKWOOD, MO. 63122
TEL. (314) 965-6333
FAX. (314) 965-8997
info@fletcher-architects.com

CONSULTANTS

CIVIL ENGINEER:
FRONTENAC ENGINEER GROUP, INC.
16 SUNNEN DR. SUITE 165
ST. LOUIS, MO 63143
PHONE (314) 644-2200
FAX (314) 644-0645

STRUCT. ENGINEER:
ABS CONSULTING
1848 LACKLAND HILLS PARKWAY
ST. LOUIS, MO 63146
PHONE (314) 994-7007
FAX (314) 994-0722

M.E.P. ENGINEER:
SSC ENGINEERING
550 SPIRIT OF ST. LOUIS BLVD.
CHESTERFIELD, MO 63005
PHONE (636) 530-7770
FAX. (636) 530-7877

HARDWARE CONSULTANT
8710
5555 PIERRE CT.
ST. LOUIS, MO 63128
PHONE (314) 487-7776
FAX (314) 843-2243

KITCHEN CONSULTANTS
THE GEIGER GROUP
3501 WATSON ROAD
ST. LOUIS, MO 63139
PHONE (314) 645-2987
FAX. (314) 645-3288

LANDSCAPE ARCHITECT
AUSTIN TAO, AND ASSOC.
3101 LOCUST, 2ND. FLOOR
ST. LOUIS, MO 63103
PHONE (314) 436-3999
FAX. (314) 436-9130

INTERIOR DESIGN
OTOOLE DESIGN ASSOC.
124 WEST JEFFERSON
KIRKWOOD, MO 63122
PHONE (314) 909-1905
FAX. (314) 909-1906

PROJECT:
ADDITION AND RENOVATIONS TO
McKnight Road
Church of Christ
2515 SOUTH McKNIGHT ROAD
ST. LOUIS, MO 63124

THIS DRAWING WAS PREPARED BASED ON A SURVEY PREPARED BY OTHERS. FRONTENAC ENGINEERING, AND THE PROFESSIONAL WHOSE SEAL APPEARS ON THIS PLAN, HEREBY DISCLAIMS RESPONSIBILITY FOR THE ACCURACY OF SAID SURVEY.

THE SEAL AND SIGNATURES APPLY ONLY TO THE DOCUMENT TO WHICH THEY ARE AFFIXED, AND WE EXPRESSLY DISCLAIM ANY RESPONSIBILITY FOR ALL OTHER PLANS, SPECIFICATIONS, ESTIMATES, REPORTS, OR OTHER DOCUMENTS OR INSTRUMENTS RELATING TO OR INTENDED TO BE USED FOR ANY PART OR PARTS OF THE PROJECT.

COPYRIGHT 2002 FLETCHER ARCHITECTS, INC.

NO	DATE	REVISIONS
	00/00/01	ADDENDUM #0

PROJECT NO. 0113401
DRAWN BY: A.P.
CHECKED BY: S.R.M.
DATE: NOVEMBER 1, 2002

SHEET NO. C1

CONSTRUCTION/BID DRAWINGS

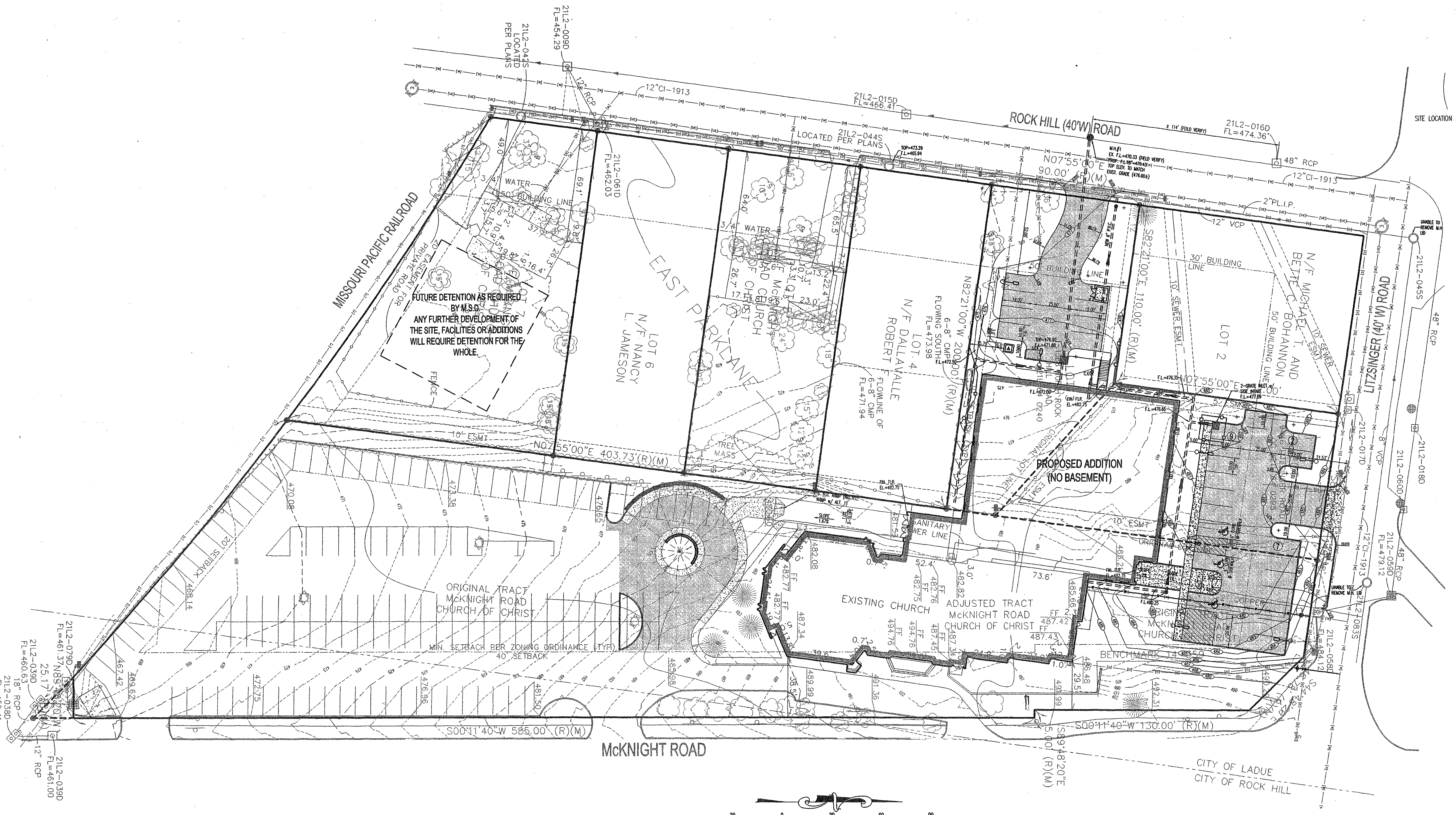

SITE PLAN

Scale: 1" = 30'

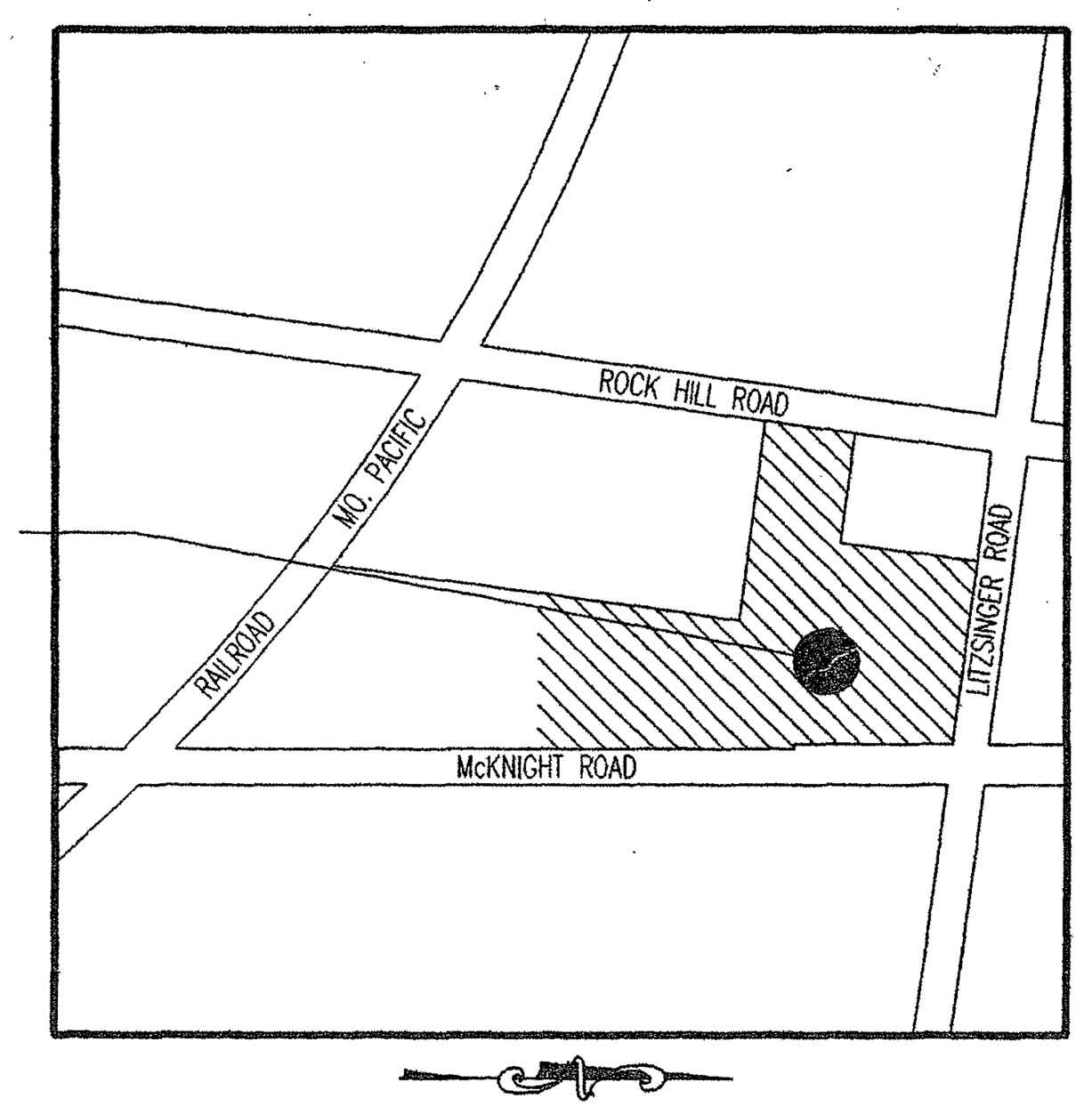

SITE LOCATION MAP

GENERAL NOTES:

1) UNDERGROUND FACILITIES, STRUCTURES, AND UTILITIES HAVE BEEN PLOTTED FROM AVAILABLE SURVEYS AND RECORDS. THEREFORE; THEIR LOCATIONS MUST BE CONSIDERED APPROXIMATE ONLY. THERE MAY BE OTHERS, THE EXISTENCE OF WHICH IS PRESENTLY NOT KNOWN. IT IS THE RESPONSIBILITY OF THE CONTRACTOR TO HAVE ALL UNDERGROUND UTILITIES LOCATED IN THE FIELD PRIOR TO EXCAVATION OR CONSTRUCTION.
2) ANY EXCESS CONSTRUCTION AND/OR EXCAVATION MATERIALS SHALL BE REMOVED FROM SITE AND DISPOSED OF PROPERLY BY THE CONTRACTOR.
3) CONTRACTOR TO DISTURB AFFECTED AREAS THE MINIMUM AMOUNT NECESSARY TO COMPLETE THE WORK AND TO TAKE EXTRA CARE NOT TO DISTURB ANY AREAS OUTSIDE THE CONSTRUCTION AREA.
4) THE CONTRACTOR SHALL BE RESPONSIBLE FOR INSTALLING EROSION CONTROL DEVICES AS NECESSARY TO CONTROL EROSION DURING THE COURSE OF CONSTRUCTION.
5) THE CONTRACTOR SHALL BE RESPONSIBLE FOR OBTAINING ALL CONSTRUCTION PERMITS FROM THE ST. LOUIS COUNTY, METROPOLITAN ST. LOUIS SEWER DISTRICT AND THE ST. LOUIS COUNTY DEPARTMENT OF HIGHWAYS AND TRAFFIC, AS WELL AS ANY OTHER PERMITS.
6) ALL CONSTRUCTION METHODS AND MATERIALS SHALL CONFORM TO THE ST. LOUIS METROPOLITAN SEWER DISTRICT STANDARD CONSTRUCTION SPECS (2000 EDITION).
7) INSTALLATION OF LANDSCAPING AND ORNAMENTAL ENTRANCE MONUMENT CONSTRUCTION IF PROPOSED, SHALL BE REVIEWED BY THE DEPARTMENT OF HIGHWAYS AND TRAFFIC FOR SIGHT DISTANCE CONSIDERATION AND APPROVED PRIOR TO INSTALLATION OR CONSTRUCTION.
8) UTILITY COMPANIES WILL REQUIRE COMPENSATION FOR RELOCATION OF THEIR UTILITY FACILITIES WITHIN PUBLIC ROAD RIGHT-OF-WAY. UTILITY RELOCATION COSTS SHALL BE THE RESPONSIBILITY OF THE DEVELOPER.
9) A GRADING PERMIT IS REQUIRED PRIOR TO ANY GRADING ON THE SITE. NO CHANGE IN WATERSHED SHALL BE PERMITTED.
10) INTERIM STORM WATER DRAINAGE CONTROL IN THE FORM OF SILTATION CONTROL MEASURES ARE REQUIRED.
11) ALL STORM WATER SHALL BE DISCHARGED AT AN ADEQUATE NATURAL DISCHARGE POINT.
12) ADEQUATE TEMPORARY OFF-STREET PARKING SHALL BE PROVIDED FOR CONSTRUCTION EMPLOYEES. PARKING ON NON-SURFACED AREAS SHALL BE PROHIBITED IN ORDER TO ELIMINATE THE CONDITION WHEREBY MUD FROM CONSTRUCTION AND EMPLOYEE VEHICLES IS TRACKED ONTO THE PAVEMENT CAUSING HAZARDOUS ROADWAY AND DRIVING CONDITIONS.
13) ALL FILLED AREAS, INCLUDING TRENCH BACK FILLS, UNDER BUILDING, PROPOSED STORM AND SANITARY SEWER LINES, PUBLIC RIGHT-OF-WAY AND PAVED AREAS SHALL BE COMPACTED TO A MINIMUM OF 90% OF MAXIMUM DRY DENSITY AS DETERMINED BY THE MODIFIED AASHTO COMPACTION TEST, ASTM D1557-78.
14) CONTRACTOR TO CALL 1-800-DIG-RITE TO HAVE ALL UTILITIES LOCATED ON THE GROUND IN ALL AREAS AFFECTED BY CONSTRUCTION, PRIOR TO BEGINNING CONSTRUCTION.
15) FOR SEWER PIPE (STORM, SANITARY, AND COMBINED) WITH A DESIGN GRADE LESS THAN ONE PERCENT (1%), VERIFICATION OF THE PIPE GRADE WILL BE REQUIRED FOR EACH INSTALLED REACH OF SEWER, PRIOR TO ANY SURFACE RESTORATION OR INSTALLATION OF ANY SURFACE IMPROVEMENTS. THE CONTRACTOR'S FIELD SUPERVISOR WILL BE REQUIRED TO PROVIDE DAILY DOCUMENTATION VERIFYING THAT THE AS-BUILT PIPE GRADE MEETS THE DESIGN GRADE THROUGH THE SUBMITTAL OF SIGNED CUT SHEETS TO THE M.S.D. INSPECTOR UPON REQUEST. FIELD SURVEYED VERIFICATION MUST BE MADE UNDER THE DIRECTION OF A LICENSED LAND SURVEYOR OR REGISTERED ENGINEER. THE CONTRACTOR WILL BE REQUIRED TO REMOVE AND REPLACE ANY SEWER REACH HAVING AN AS-BUILT GRADE WHICH IS FLATTER THAN THE DESIGN GRADE BY MORE THAN 0.1%. SEWERS WITH GRADES GREATER THAN THE DESIGN SLOPE MAY BE LEFT IN PLACE, PROVIDED NO OTHER SEWER GRADE IS REDUCED BY THIS VARIANCE IN THE AS-BUILT GRADE. M.S.D. ALSO RESERVES THE RIGHT TO REQUIRE THE CONTRACTOR TO REMOVE AND REPLACE ANY SEWER (AT ANY TIME PRIOR TO CONSTRUCTION APPROVAL) FOR WHICH THE AS-BUILT GRADE DOES NOT COMPLY WITH THE GRADE TOLERANCE STATED IN THE ABOVE PARAGRAPH. THE SEWER CONTRACTOR SHALL BE RESPONSIBLE FOR ANY COST ASSOCIATED WITH THE FIELD VERIFICATION OF THE SEWER GRADE, OR REMOVAL AND REPLACEMENT OF THE SEWER PIPE OR ASSOCIATED APPURTENANCES.

(X) SEE SHEET C3 FOR KEYED NOTES.

M.S.D. BENCHMARK:

14-359

493.09 – "L" ON THE NORTHEAST CORNER AT THE NORTH END OF A RETAINING WALL AT THE CHURCH OF CHRIST; 50' WEST OF THE CENTERLINE OF McKNIGHT ROAD AND 200' SOUTH OF THE CENTERLINE OF LITZSINGER ROAD.

14-31

507.30 – RM 416 FEMA PANEL 301; "SQ." ON SOUTHEAST CORNER OF THIRD CONCRETE STEP ON SOUTH SIDE OF FRONT YARD ENTRANCE TO HOUSE AT #1101 N. ROCK HILL ROAD.

PER SURVEYOR, ALL EASEMENTS RECORDED EAST PARKLANE SUBDIVISION, BK. 55, PG. 43

M.S.D. P# 24741
M.S.D. BASE MAP 21-L2

WUNNENBERG'S STREET GUIDE 2002
PAGE 35 Q-22

LEGEND

EXISTING		NEW
○	MANHOLE	●
⊡	INLET MANHOLE	■
▤	GRATE INLET	▤
◫	DOUBLE INLET	■
⌐	MULTIPLE INLET	■
◯	MANHOLE DESIGNATOR	◯
⬡	INLET OR STRUCTURE DESIGNATOR	⬡
=============	SEWERS	=============
----XXX----	GRADE	(XXX)
-□-○-□-	FENCE	— X — X
— 2"G —	UNDERGROUND UTILITIES	
	FLOW LINE OF CREEK OR DITCH	

= FLARED END SECTION
= BOLLARD
= AIR CONDITION UNIT
= ELECTRIC METER
= POWER VAULT
= TELEPHONE VAULT
= TRANSFORMER TOWER
= UTILITY POLE ANCHOR
= LIGHT STANDARD
= FLOW DIRECTION
= TEST HOLE
= BENCHMARK
= TELEPHONE PEDESTAL
= CABLE T.V. PEDESTAL
= TREE
= TREE LINE

EXISTING		NEW
	GAS METER (G.M.)	
	GAS VALVE (G.V.)	
△	PAD MOUNTED TRANSFORMER	▲
	UTILITY POLE (U.P.)	
	SIGN	
+ XXX.XX	SPOT ELEV.	XXX.XX

ABBREVIATIONS :

A.I. = AREA INLET   A.T.G. = ADJUST TO GRADE
ASPH. = ASPHALT
BLDG. = BUILDING
C.I. = CURB INLET
C.O. = CLEANOUT
CONC. = CONCRETE
D.G.I. = DOUBLE GRATE INLET
DIA. = DIAMETER
D.I.P. = DUCTILE IRON PIPE
ELEV. = ELEVATION
E.O.P. = EDGE OF PAVEMENT
ESM'T. = EASEMENT
EXIST. = EXISTING
F.D. = FLOOR DRAIN
FIN. = FINISH
FLR. = FLOOR
F.O.L. = FIBER OPTIC LINE
G.I. = GRATE INLET
INT. = INTEGRAL
M.H. = MANHOLE
O.H.E. = OVERHEAD ELECTRIC
P.V.C. = POLYVINYL CHLORIDE PIPE
PVM'T. = PAVEMENT
REQ'D. = REQUIRED
R.C.P. = REINFORCED CONCRETE PIPE
R.O.W. = RIGHT OF WAY
T.B.R. = TO BE REMOVED
T.B.R. & R. = TO BE REMOVED & REPLACED
T.R.R.A. = TERMINAL RAILROAD ASSOCIATION
U.G.E. = UNDERGROUND ELECTRIC
U.G.T. = UNDERGROUND TELEPHONE
V.C.P. = VITRIFIED CLAY PIPE
W. = WIDE

EXISTING		NEW
▷	REDUCER	▶
▻	THRUST BLOCK	►
⊞	WATER METER (W.M.)	■
	FIRE HYDRANT (F.H.)	
	AIR RELIEF VALVE	
	BLOW-OFF VALVE	
⋈	BUTTERFLY VALVE	⋈
N	CHECK VALVE	N
⋈	GATE VALVE	⋈
(P.I.V.)	POST INDICATOR VALVE	(P.I.V.)
	SIAMESE CONNECTOR	
	WATER VALVE (W.V.)	

ADAPTER
90° BEND FLANGE
90° BEND WELDED
REDUCER FLANGE
REDUCER WELDED
TEE FLANGE
TEE WELDED
CAP/PLUG

Fletcher:: Architects, Inc.

ARCHITECTURE ■ PLANNING ■ INTERIORS
1906 NORTH SIGNAL HILLS DRIVE
KIRKWOOD, MO. 63122
TEL. (314) 965-6333
FAX. (314) 965-8997
info@fletcher-architects.com

CONSULTANTS

CIVIL ENGINEER:
FRONTENAC ENGINEER GROUP, INC.
16 SUNNEN DR. SUITE 165
ST. LOUIS, MO 63143
PHONE (314) 644-2200
FAX (314) 644-0645

STRUCT. ENGINEER:
ABS CONSULTING
1848 LACKLAND HILLS PARKWAY
ST. LOUIS, MO 63146
PHONE (314) 994-7007
FAX (314) 994-0722

M.E.P. ENGINEER:
SSC ENGINEERING
550 SPIRIT OF ST. LOUIS BLVD.
CHESTERFIELD, MO 63005
PHONE (636) 530-7770
FAX (636) 530-7877

HARDWARE CONSULTANT
8710
5555 PIERRE CT.
ST. LOUIS, MO 63128
PHONE (314) 487-7776
FAX (314) 842-2242

KITCHEN CONSULTANTS
THE GEIGER GROUP
3501 WATSON ROAD
ST. LOUIS, MO 63139
PHONE (314) 645-2987
FAX (314) 645-3208

LANDSCAPE ARCHITECT
AUSTIN TAO. AND ASSOC.
2101 LOCUST, 2ND. FLOOR
ST. LOUIS, MO 63103
PHONE (314) 436-3999
FAX (314) 436-9130

INTERIOR DESIGN
OTOOLE DESIGN ASSOC.
124 WEST JEFFERSON
KIRKWOOD, MO 63122
PHONE (314) 909-1905
FAX (314) 909-1906

PROJECT:
ADDITION AND RENOVATIONS TO
McKnight Road
Church of Christ
2515 SOUTH McKNIGHT ROAD
ST. LOUIS, MO 63124

THIS DRAWING WAS PREPARED BASED ON A SURVEY PREPARED BY OTHERS. FRONTENAC ENGINEERING, AND THE PROFESSIONAL WHOSE SEAL APPEARS ON THIS PLAN, HEREBY DISCLAIMS RESPONSIBILITY FOR THE ACCURACY OF SAID SURVEY.

THE SEAL AND SIGNATURES APPLY ONLY TO THE DOCUMENT TO WHICH THEY ARE AFFIXED, AND WE EXPRESSLY DISCLAIM ANY RESPONSIBILITY FOR ALL OTHER PLANS, SPECIFICATIONS, ESTIMATES, REPORTS, OR OTHER DOCUMENTS OR INSTRUMENTS RELATING TO OR INTENDED TO BE USED FOR ANY PART OR PARTS OF THE PROJECT.

COPYRIGHT 2002 FLETCHER ARCHITECTS, INC.

NO	DATE	REVISIONS
	00/00/01	ADDENDUM #0

PROJECT NO. 01134C2
SHEET NO. C2
DRAWN BY: A.P.
CHECKED BY: S.R.M.
DATE: NOVEMBER 1, 2002

CONSTRUCTION/BID DRAWINGS

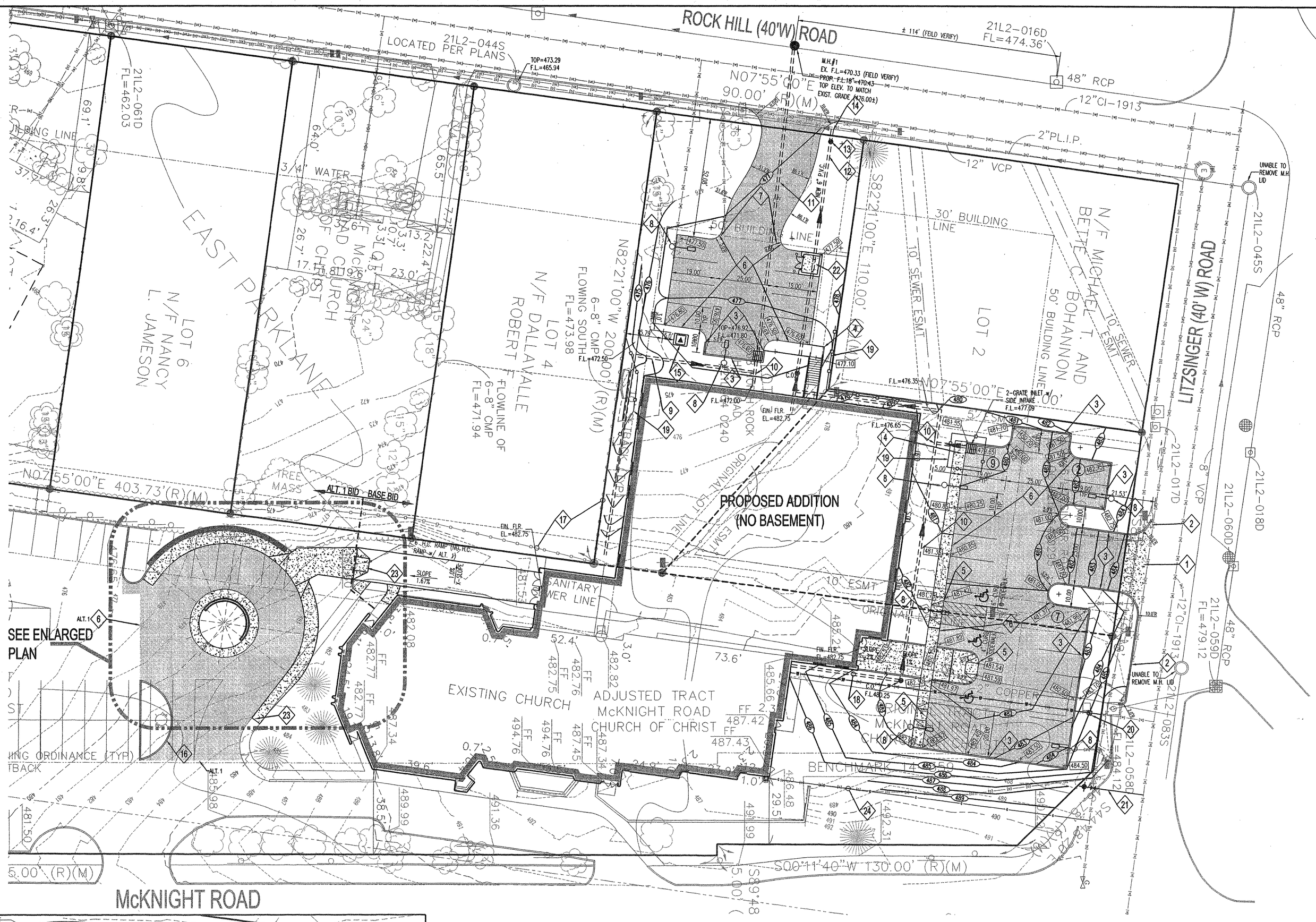

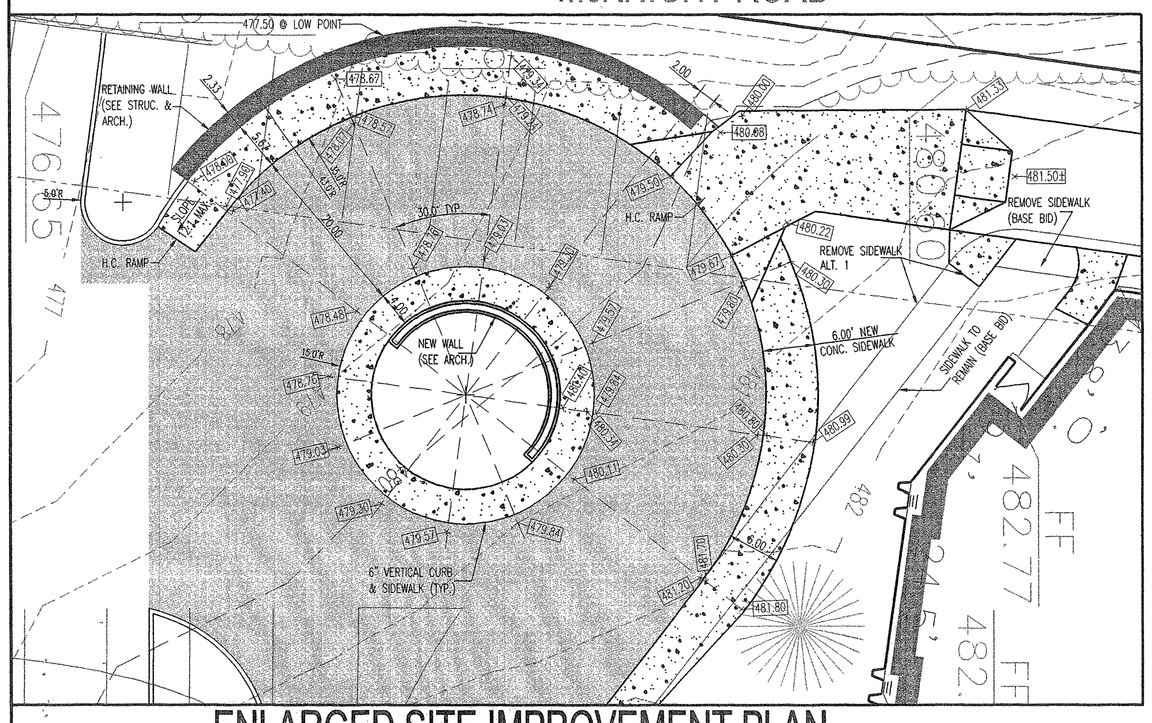

SITE IMPROVEMENT PLAN

Scale 1" = 20'

ENLARGED SITE IMPROVEMENT PLAN

SCALE: 1" = 10'

M.S.D. P# 24741
M.S.D. BASE MAP 21-L2

KEYED NOTES:

1. NEW TYPE 1 SPECIAL COMMERCIAL DRIVE ENTRANCE. MATCH EXIST. GRADES AT STREET. (SEE DETAIL #33 ON SHEET C5)
2. SAWCUT EXISTING STREET FULL DEPTH AND REMOVE EXIST. CURB. POUR NEW TYPE 5" CONC. CURB (SEE DETAIL #28 ON SHEET C5).
3. NEW ASPHALT CURB (SEE DETAIL #20 ON SHEET C5)
4. NEW 5' CONC. SIDEWALK w/ INTEGRAL CURB. (SEE DETAIL #18 ON SHEET C5) NOTE: VARIABLE CURB HEIGHT ON PLANS
5. HANDICAP RAMP. (SEE DETAIL #16 ON SHEET C5)
6. 4" ASPHALT PAVING. (SEE DETAIL #20 ON SHEET C5)
7. HEAVY DUTY ASPHALT PAVING. (SEE DETAIL #21 ON SHEET C5)
8. NEW LIGHT STANDARD. (SEE DETAIL #30 ON SHEET C5) (SEE ARCHITECTURAL AND ELECTRICAL FOR MORE INFORMATION).
9. NEW 8" P.V.C. STORM DRAIN. (PRIVATE)
10. NEW 12" P.V.C. STORM DRAIN. (PRIVATE)
11. NEW 18" R.C.P. STORM (PRIVATE)
12. NEW 6" P.V.C. SANITARY LATERAL @ MIN. 2% SLOPE
13. SAMPLING TEE (SEE DETAIL #12 ON SHEET C5)
14. MACHINE TAP: ± 135' FROM DOWNSTREAM MANHOLE. FLOW LINE ELEVATION OF SEWER MAIN UNKNOWN.
15. NEW ELECTRICAL TRANSFORMER, SEE ELECTRICAL PLANS FOR MORE INFORMATION.
16. NEW ASPHALT CURB & TOP SOIL FILL DIRT FOR LANDSCAPING. (ALT. 1)
17. REPLACE EXISTING 6' PRIVACY FENCE WITH NEW 8' FENCE. MATCH EXISTING MATERIALS & CONSTRUCTION TYPE.
18. NEW DOWNSPOUT EXTENSION FOR EXISTING ROOF DRAIN. SEE MECHANICAL DRAWINGS.
19. SILTATION CONTROL FENCE. ENCLOSE PROPOSED GRATED INLETS, TYP. @ 2 LOCATIONS. (SEE DETAIL #34 SHEET C5).
20. NEW WATER METER SET TO GRADE, OR REUSE EXISTING IF PERMITTED BY MISSOURI AMERICAN WATER COMPANY, AND NEW 2" COPPER WATER SERVICE TO BUILDING. CONNECT TO EXISTING SERVICE LINE EACH END.
21. NEW PUBLIC FIRE HYDRANT PER FIRE MARSHAL'S REQUIREMENTS.
22. NEW TRASH ENCLOSURE. SEE ARCHITECTURAL DRAWINGS.
23. MATCH EXISTING PAVEMENT.
24. NEW 2-1/2" GAS SERVICE & METER. ABANDON EXISTING SERVICE & REMOVE EXIST. METER.

Fletcher:: Architects, Inc.

ARCHITECTURE ■ PLANNING ■ INTERIORS
1906 NORTH SIGNAL HILLS DRIVE
KIRKWOOD, MO. 63122
TEL. (314) 965-6333
FAX. (314) 965-8997
info@fletcher-architects.com

CONSULTANTS

CIVIL ENGINEER:
FRONTENAC ENGINEER GROUP, INC.
16 SUNNEN DR. SUITE 165
ST. LOUIS, MO 63143
PHONE (314) 644-2200
FAX. (314) 644-0645

STRUCT. ENGINEER:
ABS CONSULTING
1844 LACKLAND HILLS PARKWAY
ST. LOUIS, MO 63146
PHONE (314) 994-7007
FAX. (314) 994-0722

M.E.P. ENGINEER:
SSC ENGINEERING
550 SPIRIT OF ST. LOUIS BLVD.
CHESTERFIELD, MO 63000
PHONE (636) 530-7770
FAX. (636) 530-7877

HARDWARE CONSULTANT
8710
5555 PIERRE CT.
ST. LOUIS, MO 63128
PHONE (314) 487-7776
FAX. (314) 843-3242

KITCHEN CONSULTANTS
THE GEIGER GROUP
350 WATSON ROAD
ST. LOUIS, MO 63139
PHONE (314) 645-2987
FAX. (314) 645-3208

LANDSCAPE ARCHITECT
AUSTIN TAO, AND ASSOC.
3101 LOCUST, 2ND. FLOOR
ST. LOUIS, MO 63103
PHONE (314) 436-3999
FAX. (314) 436-9130

INTERIOR DESIGN
OTOOLE DESIGN ASSOC.
124 WEST JEFFERSON
KIRKWOOD, MO 63122
PHONE (314) 909-1905
FAX. (314) 909-1906

PROJECT:
ADDITION AND RENOVATIONS TO
McKnight Road
Church of Christ
2515 SOUTH McKNIGHT ROAD
ST. LOUIS, MO 63124

THIS DRAWING WAS PREPARED BASED ON A SURVEY PREPARED BY OTHERS. FRONTENAC ENGINEERING, AND THE PROFESSIONAL WHOSE SEAL APPEARS ON THIS PLAN, HEREBY DISCLAIMS RESPONSIBILITY FOR THE ACCURACY OF SAID SURVEY.

THE SEAL AND SIGNATURES APPLY ONLY TO THE DOCUMENT TO WHICH THEY ARE AFFIXED, AND WE EXPRESSLY DISCLAIM ANY RESPONSIBILITY FOR ALL OTHER PLANS, SPECIFICATIONS, ESTIMATES, REPORTS, OR OTHER DOCUMENTS OR INSTRUMENTS RELATING TO OR INTENDED TO BE USED FOR ANY PART OR PARTS OF THE PROJECT.

COPYRIGHT 2002 FLETCHER ARCHITECTS, INC.

NO	DATE	REVISIONS
	00/00/01	ADDENDUM #0

PROJECT NO. 01134C3
DRAWN BY: A.P.
CHECKED BY: S.R.M.
DATE: NOVEMBER 1, 2002

SHEET NO. C3

CONSTRUCTION/BID DRAWINGS

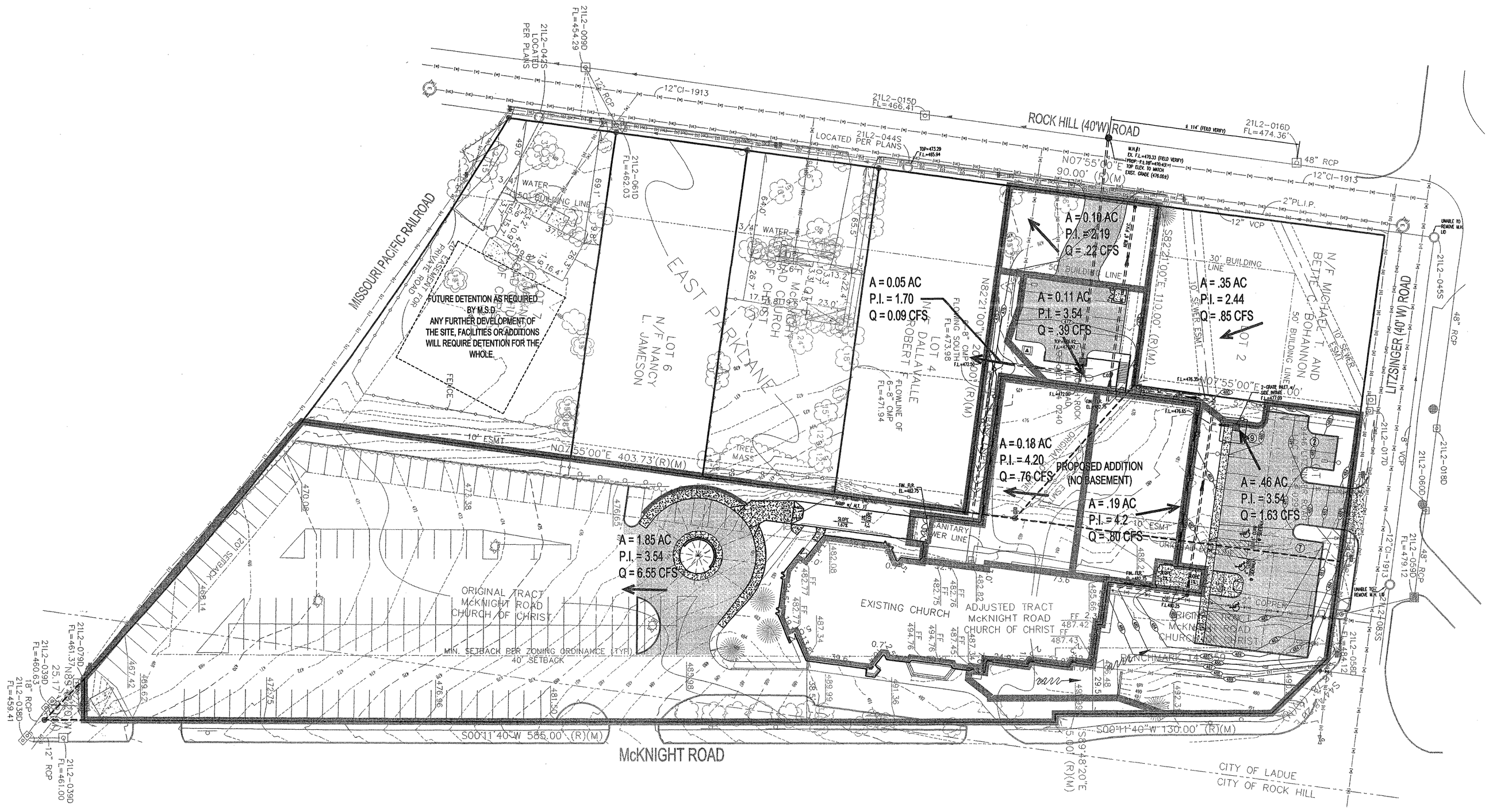

DRAINAGE AREA MAP

Scale: 1" = 30'

RUNOFF CALCULATIONS

SITE AREA: 2.8 AC.

EXISTING IMPERVIOUS 1.83 AC.

PROPOSED IMPERVIOUS 2.13 AC.

NET INCREASED RUNOFF: (3.54-1.7) (0.3 AC) =0.55 CFS

M.S.D. P# 24741
M.S.D. BASE MAP 21-L2

Fletcher:: Architects, Inc.

ARCHITECTURE ■ PLANNING ■ INTERIORS
1906 NORTH SIGNAL HILLS DRIVE
KIRKWOOD, MO. 63122
TEL. (314) 965-6333
FAX. (314) 965-8997
info@fletcher-architects.com

CONSULTANTS

CIVIL ENGINEER:
FRONTENAC ENGINEER GROUP, INC.
16 SUNNEN DR. SUITE 165
ST. LOUIS, MO 63143
PHONE (314) 644-2200
FAX. (314) 644-0646

STRUCT. ENGINEER:
ABS CONSULTING
1848 LACKLAND HILLS PARKWAY
ST. LOUIS, MO 63146
PHONE (314) 994-7007
FAX. (314) 994-0722

M.E.P. ENGINEER:
SSC ENGINEERING
550 SPIRIT OF ST. LOUIS BLVD.
CHESTERFIELD, MO 63005
PHONE (636) 530-7770
FAX. (636) 530-7977

HARDWARE CONSULTANT
8710
5555 PIERRE CT.
ST. LOUIS, MO 63128
PHONE (314) 487-7776
FAX. (314) 843-2242

KITCHEN CONSULTANTS
THE GEIGER GROUP
3551 WATSON ROAD
ST. LOUIS, MO 63139
PHONE (314) 645-2987
FAX. (314) 645-3208

LANDSCAPE ARCHITECT
AUSTIN TAO AND ASSOC.
3101 LOCUST, 2ND. FLOOR
ST. LOUIS, MO 63103
PHONE (314) 436-3999
FAX. (314) 436-9130

INTERIOR DESIGN
O'TOOLE DESIGN ASSOC.
124 WEST JEFFERSON
KIRKWOOD, MO 63122
PHONE (314) 909-1905
FAX. (314) 909-1906

PROJECT:
ADDITION AND RENOVATIONS TO
McKnight Road Church of Christ
2515 SOUTH McKNIGHT ROAD
ST. LOUIS, MO 63124

THIS DRAWING WAS PREPARED BASED ON A SURVEY PREPARED BY OTHERS. FRONTENAC ENGINEERING, AND THE PROFESSIONAL WHOSE SEAL APPEARS ON THIS PLAN, HEREBY DISCLAIMS RESPONSIBILITY FOR THE ACCURACY OF SAID SURVEY.

THE SEAL AND SIGNATURES APPLY ONLY TO THE DOCUMENT TO WHICH THEY ARE AFFIXED, AND WE EXPRESSLY DISCLAIM ANY RESPONSIBILITY FOR ALL OTHER PLANS, SPECIFICATIONS, ESTIMATES, REPORTS, OR OTHER DOCUMENTS OR INSTRUMENTS RELATING TO OR INTENDED TO BE USED FOR ANY PART OR PARTS OF THE PROJECT.

COPYRIGHT 2002 FLETCHER ARCHITECTS, INC.

NO	DATE	REVISIONS
	00/00/01	ADDENDUM #0

PROJECT NO. 01134C4
DRAWN BY: A.P.
CHECKED BY: S.R.M.
DATE: NOVEMBER 1, 2002

SHEET NO. C4

CONSTRUCTION/BID DRAWINGS

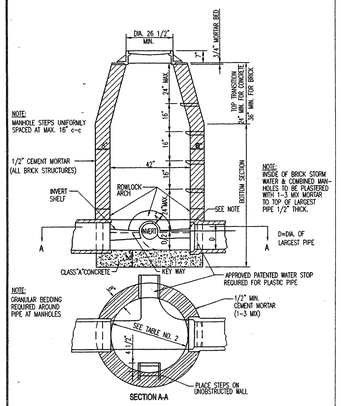

LINE MANHOLE PIPE SEWERS 8"-24" DIA.

SCALE: N.T.S.

8

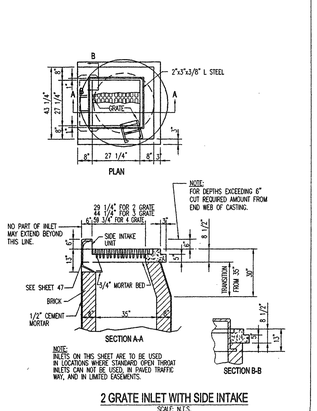

2 GRATE INLET WITH SIDE INTAKE

SCALE: N.T.S.

9

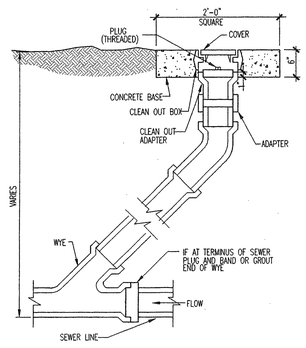

CLEANOUT

SCALE:N.T.S.

10

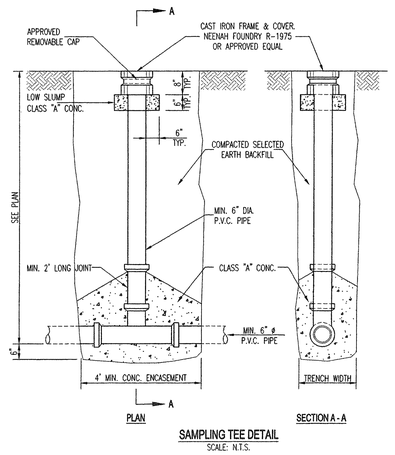

SAMPLING TEE DETAIL

SCALE: N.T.S.

12

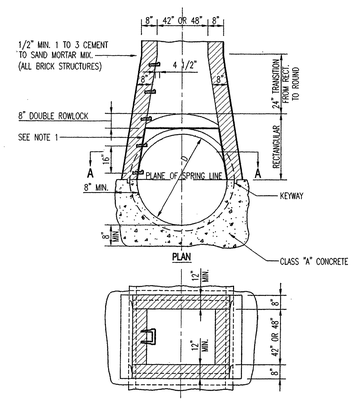

MANHOLE ON CONCRETE PIPE SEWERS 48" THRU 54" DIA.

SCALE: N.T.S.

NOTES:

1) INSIDE OF BRICK STORMWATER & COMBINED MANHOLES TO BE PLASTERED WITH 1/2" MIN. 1 TO 3 CEMENT TO SAND MORTAR MIX TO TOP OF LARGEST PIPE.
2) MANHOLE STEPS UNIFORMLY SPACED 16" C.C.
3) THE MIN. INSIDE DIAMETER FOR THE RISER SECTIONS SHALL BE 42" FOR 8" DIAMETER SANITARY SEWERS AND ALL STORM SEWERS. THE MINIMUM INSIDE DIAMETER FOR SANITARY SEWERS LARGER THAN 8" DIAMETER IS 48".

14

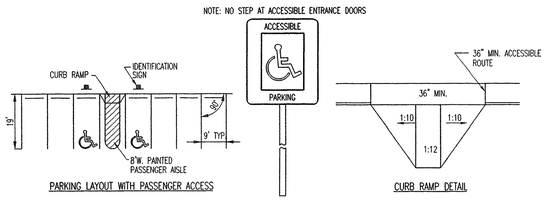

PARKING LAYOUT WITH PASSENGER ACCESS

HANDICAPPED IDENTIFICATION SIGN

SCALE: N.T.S.

CURB RAMP DETAIL

16

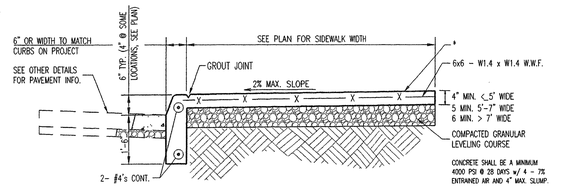

SIDEWALK w/ INTEGRAL CURB

SCALE: N.T.S.

18

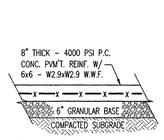

TYPICAL SECTION - CONCRETE PAVEMENT

SCALE:N.T.S.

19

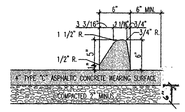

ASPHALT CURB & PAVEMENT DETAIL

SCALE:N.T.S.

20

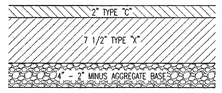

HEAVY DUTY ASPHALTIC PAVEMENT

SCALE:N.T.S.

21

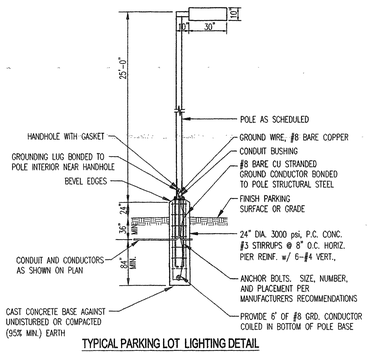

TYPICAL PARKING LOT LIGHTING DETAIL

SCALE: N.T.S.

400 WATT. FOREWARD THROW HIGH PRESSURE SODIUM

36

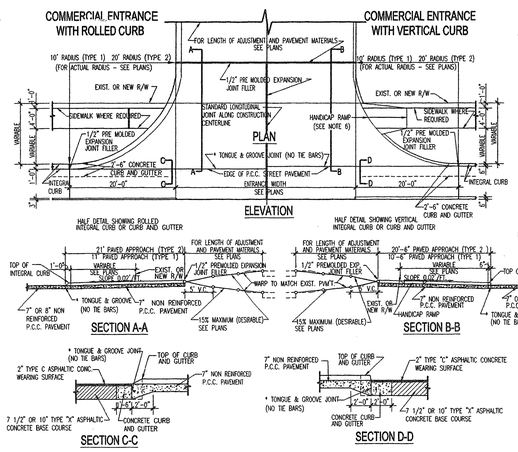

TYPE 1 & 2 SPECIAL COMMERCIAL CONCRETE ENTRANCES

SCALE: N.T.S.

30

GENERAL NOTES:

1.) DO NOT SCALE DRAWINGS. FOLLOW DIMENSIONS.
2.) CURB AND JOINT DIMENSIONS SHOWN IN PAVEMENT CONSTRUCTION DETAILS FOR "JOINT AND CURBS". STANDARD DRAWING ESQD.03.
3.) ALL 1/2" PREMOLDED EXPANSION JOINTS SHALL EXTEND FROM SUBGRADE TO 1/2" BELOW TOP OF FINISHED SURFACE OF CONCRETE. THE UPPER 1/2" SHALL BE OPEN AND EDGES OF NEW CONCRETE SHALL BE ROUNDED TO 1/4" RADII.
4.) PLAN IS SYMMETRICAL ABOUT CONSTRUCTION CENTERLINE.
5.) THE THICKNESS OF THE FIRST SECTION OF SIDEWALK AND/OR HANDICAP RAMP ON EACH SIDE OF THE ENTRANCE SHALL BE INCREASED TO MATCH THE DRIVEWAY APPROACH PAVEMENT THICKNESS (7").
6.) FOR HANDICAP RAMP DETAILS REFER TO PAVEMENT CONSTRUCTION DETAILS FOR "CONCRETE SIDEWALK AND HANDICAP RAMPS," CSOD.II.

* WHEN NEW DRIVEWAY IS CONNECTED TO EXISTING PAVEMENT, USE 5/8"ø DEFORMED TIE BAR, 18" IN LENGTH, 12" ON CENTER, PLACED IN DRILLED HOLES FILLED WITH NON-SHRINK GROUT.

33

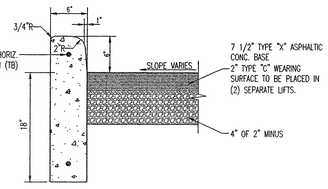

TYPE "S" CURB

(STANDARD TYPE "C" PAVING)

SCALE:N.T.S.

28

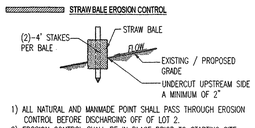

1) ALL NATURAL AND MANMADE POINT SHALL PASS THROUGH EROSION CONTROL BEFORE DISCHARGING OFF OF LOT 2.
2) EROSION CONTROL SHALL BE IN PLACE PRIOR TO STARTING SITE GRADING & SHALL REMAIN IN PLACE UNTIL ALL DISTURBED AREAS ARE SODDED AND/OR SEEDED.
3) ALL VEHICLES EXITING ONTO OFF-SITE DRIVE MUST CLEAN ALL MUD OFF OF VEHICLE IN WASH DOWN AREA

EROSION CONTROL

34

M.S.D. P# 24741
M.S.D. BASE MAP 21-L2

42

Fletcher :: Architects, Inc.

ARCHITECTURE ▪ PLANNING ▪ INTERIORS
1906 NORTH SIGNAL HILLS DRIVE
KIRKWOOD, MO. 63122
TEL. (314) 965-6333
FAX. (314) 965-8997
info@fletcher-architects.com

CONSULTANTS

CIVIL ENGINEER:
FRONTENAC ENGINEER GROUP, INC.
16 SUNNEN DR. SUITE 165
ST. LOUIS, MO 63143
PHONE (314) 644-2200
FAX (314) 644-0645

STRUCT. ENGINEER:
ABS CONSULTING
1848 LACKLAND HILLS PARKWAY
ST. LOUIS, MO 63146
PHONE (314) 994-7007
FAX (314) 994-0732

M.E.P. ENGINEER:
SSC ENGINEERING
550 SPIRIT OF ST. LOUIS BLVD.
CHESTERFIELD, MO 63005
PHONE (636) 530-7770
FAX (636) 530-7877

HARDWARE CONSULTANT
8710
5555 PIERRE CT.
ST. LOUIS, MO 63128
PHONE (314) 487-7776
FAX (314) 843-2242

KITCHEN CONSULTANTS
THE GEIGER GROUP
3501 WATSON ROAD
ST. LOUIS, MO 63139
PHONE (314) 645-2987
FAX (314) 645-3208

LANDSCAPE ARCHITECT
AUSTIN TAO AND ASSOC.
2101 LOCUST, 2ND. FLOOR
ST. LOUIS, MO 63103
PHONE (314) 436-3999
FAX (314) 436-9130

INTERIOR DESIGN
OTOOLE DESIGN ASSOC.
124 WEST JEFFERSON
KIRKWOOD, MO 63122
PHONE (314) 909-1905
FAX (314) 909-1906

PROJECT:
ADDITION AND RENOVATIONS TO
McKnight Road Church of Christ
2515 SOUTH McKNIGHT ROAD
ST. LOUIS, MO 63124

THIS DRAWING WAS PREPARED BASED ON A SURVEY PREPARED BY OTHERS. FRONTENAC ENGINEERING, AND THE PROFESSIONAL WHOSE SEAL APPEARS ON THIS PLAN, HEREBY DISCLAIMS RESPONSIBILITY FOR THE ACCURACY OF SAID SURVEY.

THE SEAL AND SIGNATURES APPLY ONLY TO THE DRAWINGS ON WHICH THEY APPEAR. FLETCHER :: WE EXPRESSLY DISCLAIM ANY RESPONSIBILITY FOR ALL OTHER PLANS, SPECIFICATIONS, ESTIMATES, REPORTS OR OTHER DOCUMENTS OR INSTRUMENTS RELATING TO OR INTENDED TO BE USED FOR ANY PART OR PARTS OF THE PROJECT.

COPYRIGHT 2002 FLETCHER ARCHITECTS, INC.

NO	DATE	REVISIONS
	00/00/01	ADDENDUM #0

PROJECT NO. 01134C5
DRAWN BY: A.P.
CHECKED BY: S.R.M.
DATE: NOVEMBER 1, 2002

SHEET NO. C5

CONSTRUCTION/BID DRAWINGS

35

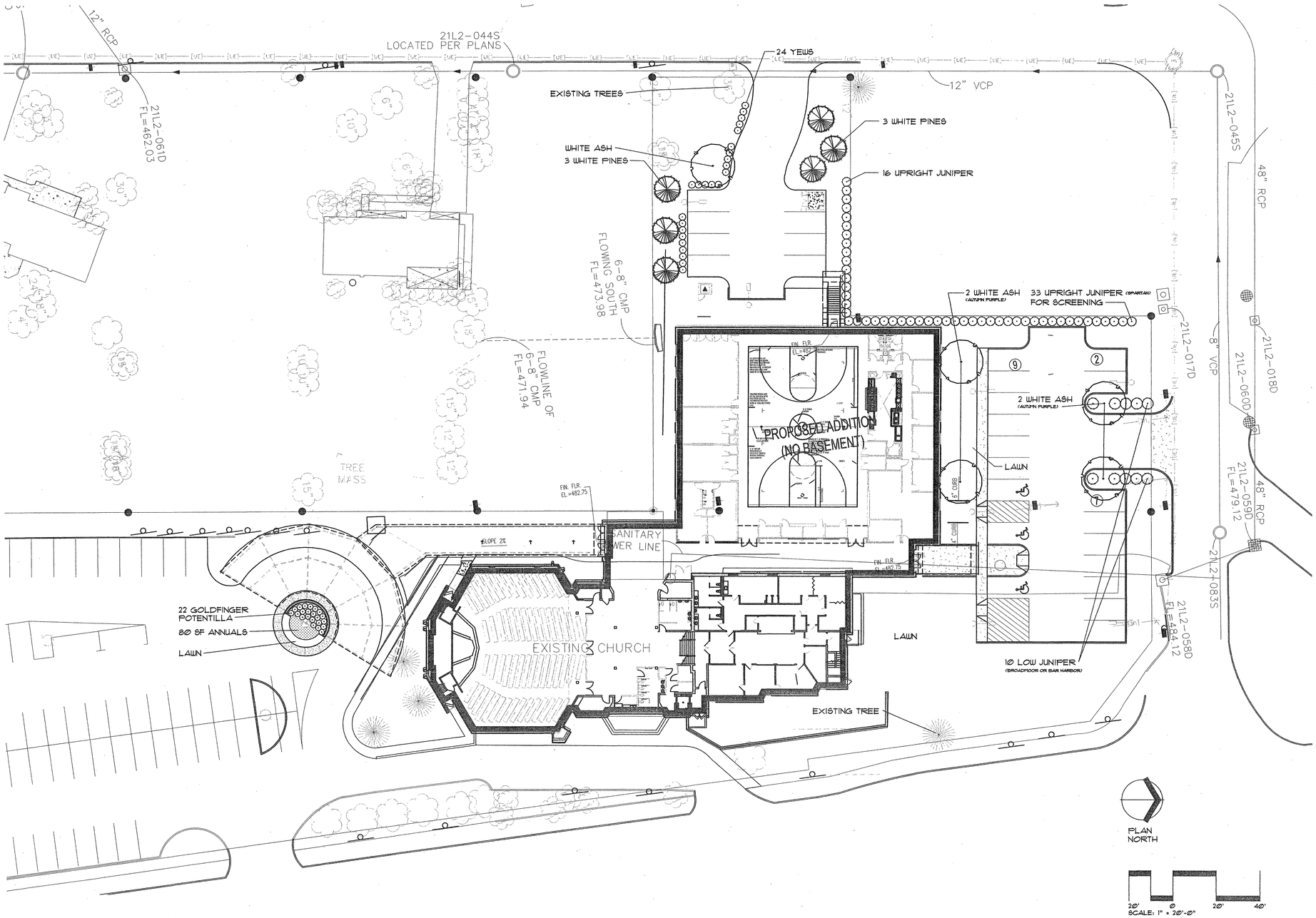

Fletcher:: Architects, Inc.

ARCHITECTURE ■ PLANNING ■ INTERIORS
1906 NORTH SIGNAL HILLS DRIVE
KIRKWOOD, MO. 63122
TEL. (314) 965-6333
FAX. (314) 965-8997
info@fletcher-architects.com

CONSULTANTS

CIVIL ENGINEER:
FRIEDMAN & KAEMPFER GROUP, INC.
16 CLEMENS CIR.
ST. LOUIS, MO 63143
PHONE (314) 644-2330
FAX (314) 644-1845

STRUCT. ENGINEER:
ASD CONSULTING
1844 LADUE WILDS PARKWAY
ST. LOUIS, MO 63146
PHONE (314) 909-2022
FAX (314) 394-0772

M.E.P. ENGINEER:
SSC ENGINEERING
1630 SPORT DR ST. LOUIS BLVD.
CHESTERFIELD, MO 63005
PHONE (636) 530-7770
FAX (636) 530-7877

HARDWARE CONSULTANT
STHE
3555 PIERRE CT.
ST. LOUIS, MO 63129
PHONE (314) 487-7770
FAX (314) 842-1242

KITCHEN CONSULTANTS
THE DESIGN GROUP
3509 WATSON ROAD
ST. LOUIS, MO 63139
PHONE (314) 645-2007
FAX (314) 645-3708

LANDSCAPE ARCHITECT
AUSTIN TAO AND ASSOC.
2709 LOCUST, 2ND. FLOOR
ST. LOUIS, MO 63103
PHONE (314) 436-3005
FAX (314) 436-3050

INTERIOR DESIGN
STROLL DESIGN ASSOC.
634 WEST JEFFERSON
KIRKWOOD, MO 63027
PHONE (314) 822-9525
FAX (314) 822-9526

PROJECT:
ADDITION AND RENOVATIONS TO
McKnight Road
Church of Christ
2515 SOUTH MCKNIGHT ROAD
ST. LOUIS, MO 63124

THE IDEAS AND DESIGNS ARE ONLY TO BE USED WITH THIS SPECIFIC PROJECT AND SHALL NOT BE LOANED, COPIED OR DISCLOSED WITHOUT WRITTEN CONSENT. VISUAL CONTACT WITH THESE PLANS SHALL CONSTITUTE PRIMA FACIE EVIDENCE OF ACCEPTANCE OF THESE RESTRICTIONS. PLANS TO BE USED FOR ANY PART OR PARTS OF THE PROJECT.

COPYRIGHT 2002 FLETCHER ARCHITECTS, INC.

NO	DATE	REVISIONS

PROJECT NO. 20202
DRAWN BY: SB
CHECKED BY: HB
DATE: NOVEMBER 1, 2002

SHEET NO. L1

CONSTRUCTION/BID DRAWINGS

PLANT LIST

QTY.	COMMON / BOTANICAL NAME	SIZE/ CONDITION / REMARKS
CANOPY TREES		
5	WHITE ASH / Fraxinus americana 'Autumn Purple'	2½" CAL. / B&B /
EVERGREEN TREES		
6	WHITE PINE / Pinus strobus	6'-7' HT. / B&B /
SHRUBS		
24	DENSE YEW / Taxus x media 'Densiformis'	24" HT. / B&B. / 3' O.C.
49	CHINESE JUNIPER / Juniperus chinensis 'Spartan'	5' HT. / B&B. / 4' O.C.
10	CREEPING JUNIPER / Juniperus horizontalis 'Bar Harbor' or BROADMOOR JUNIPER / Juniperus sabina 'Broadmoor'	36" SP. / B&B. OR CONT. / 5' O.C.
22	GOLDFINGER POTENTILLA / Potentilla fruticosa 'Goldfinger'	18" HT. / B&B. OR CONT. / 30" O.C.
80 SF	ANNUALS / Initial seasonal planting to be installed by contractor	2 QT. / CONT. / 12" O.C.

NOTES:

1. CONTRACTOR SHALL VERIFY ALL PLANT QUANTITIES. PLANT QUANTITIES ON PLANS PREVAIL OVER THOSE LISTED IN PLANT LIST.
2. CONTRACTOR SHALL VERIFY SITE CONDITIONS, INCLUDING UNDERGROUND UTILITIES PRIOR TO START OF WORK. REPORT TO OWNER'S REPRESENTATIVE ANY CONDITION THAT MAY AFFECT CONTRACT. CONTRACTOR SHALL REPAIR ANY DAMAGE TO SITE ELEMENTS DUE TO CONTRACTOR'S ACTIVITY AT NO EXTRA COST TO OWNER.
3. CONTRACTOR SHALL COORDINATE SCHEDULE AND INSTALLATION OF LANDSCAPING WITH THE OWNER'S REPRESENTATIVE.
4. MULCH ENTIRE SHRUB PLANTING AREAS WITH 3" DEPTH OF SHREDDED BARK MULCH. ALL SHRUBS BEDS IN LAWN AREAS TO HAVE SPADE CUT EDGE. PROVIDE 4' DIA. MULCH RING AROUND ALL NEW TREES WITH MIN. 3" DEPTH OF SHREDDED BARK MULCH. GROUND COVER BEDS TO RECEIVE MIN. 2" DEPTH OF SHREDDED BARK MULCH.
5. FORMAL LINES AND GROUPINGS OF A SPECIES OF TREE SHALL BE MATCHED FOR SIZE AND FORM.
6. CONTRACTOR SHALL COORDINATE SCHEDULE AND STAKING/LOCATION OF BED EDGES WITH IRRIGATION CONTRACTOR.
7. ALL DISTURBED AREAS SHALL BE SEEDED.
8. ALL SEEDED AREAS ON SLOPES OF 3:1 OR GREATER SHALL HAVE EROSION CONTROL BLANKETS AS SPECIFIED.
9. SEE CIVIL AND ARCH. DWGS FOR EXISTING AND PROPOSED CONDITIONS.
10. SEE SPECIFICATIONS FOR ADDITIONAL NOTES AND REQUIREMENTS.

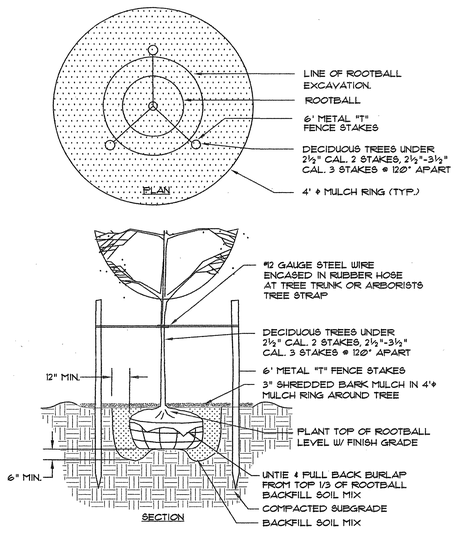

NOTES:
1. DO NOT ALLOW AIR POCKETS TO FORM WHEN BACKFILLING.
2. DO NOT DISTURB ROOT BALL WHEN PLANTING OR STAKING.
3. WATER THOROUGHLY FOLLOWING PLANTING.

TREE PLANTING & STAKING

N.T.S. — 1 / L-2

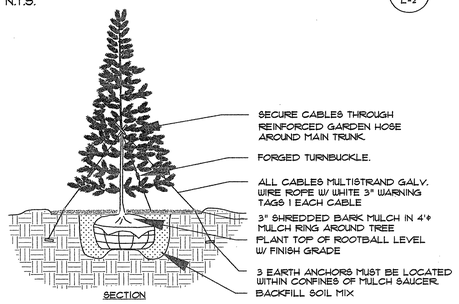

NOTES:
1. DO NOT ALLOW AIR POCKETS TO FORM WHEN BACKFILLING.
2. DO NOT DISTURB ROOT BALL WHEN PLANTING OR STAKING.
3. WATER THOROUGHLY FOLLOWING PLANTING.

EVERGREEN TREE

N.T.S. — 2 / L-2

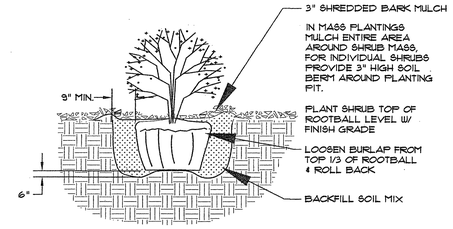

NOTES:
1. DO NOT ALLOW AIR POCKETS TO FORM WHEN BACKFILLING.
2. DO NOT DISTURB ROOT BALL WHEN PLANTING OR STAKING.
3. WATER THOROUGHLY FOLLOWING PLANTING.

SHRUB PLANTING

N.T.S. — 3 / L-2

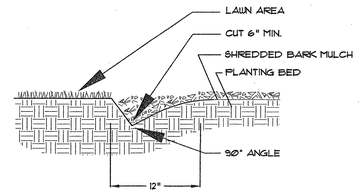

SPADE CUT EDGE

N.T.S. — 4 / L-2

Fletcher:: Architects, Inc.

ARCHITECTURE ■ PLANNING ■ INTERIORS
1906 NORTH SIGNAL HILLS DRIVE
KIRKWOOD, MO. 63122
TEL. (314) 965-6333
FAX. (314) 965-8997
info@fletcher-architects.com

CONSULTANTS

CIVIL ENGINEER:
FRONTENAC ENGR. GROUP, INC.
15 DUNKER CT.
ST. LOUIS, MO 63043
PHONE (314) 344-2200
FAX (314) 344-2656

STRUCT. ENGINEER:
ABS CONSULTING
1944 LUCAS AND HILLS PARKWAY
ST. LOUIS, MO 63043
PHONE (314) 994-7200
FAX (314) 994-2722

M.E.P. ENGINEER:
SSC ENGINEERING
550 SPIRIT OF ST. LOUIS BLVD.
CHESTERFIELD, MO 63005
PHONE (636) 530-7770
FAX (636) 530-7677

HARDWARE CONSULTANT
STO
5300 PIERRE CT.
ST. LOUIS, MO 63129
PHONE (314) 487-7776
FAX (314) 843-2762

KITCHEN CONSULTANTS
THE DESIGN GROUP
2529 WATSON ROAD
ST. LOUIS, MO 63139
PHONE (314) 645-7887
FAX (314) 645-7258

LANDSCAPE ARCHITECT
AUSTIN DEL AMO ASSOC.
2911 LUCAS DR., FLOOR
ST. LOUIS, MO 63103
PHONE (314) 436-3080
FAX (314) 436-3222

INTERIOR DESIGN
STUDIO 3 DESIGN ASSOC.
124 WEST JEFFERSON
KIRKWOOD, MO 63122
PHONE (314) 909-0505
FAX (314) 909-0510

PROJECT:
ADDITION AND RENOVATIONS TO
McKnight Road
Church of Christ
2515 SOUTH MCKNIGHT ROAD
ST. LOUIS, MO 63124

THE SEAL AND SIGNATURE APPLY ONLY TO THE DOCUMENT BEARING THEM AND ARE NOT TO BE CONSTRUED TO APPLY TO ANY ADDITIONAL OR OTHER PLANS, SPECIFICATIONS, DOCUMENTS, REPORTS OR OTHER PRODUCTS OF CONSTRUCTION RELATED TO OR SUPPOSED TO BE USED FOR ANY PART OR PARTS OF THE PROJECT.

COPYRIGHT 2002 FLETCHER ARCHITECTS, INC.

NO	DATE	REVISIONS
	00/00/01	ADDENDUM #0

PROJECT NO. 20202
SHEET NO. L2
DRAWN BY: SB
CHECKED BY: HB
DATE: NOVEMBER 1, 2002

CONSTRUCTION/BID DRAWINGS

ABBREVIATIONS

A	
AC.	ACOUSTICAL
A.D.	AREA DRAIN
ADJ.	ADJACENT
A.F.F.	ABOVE FINISH FLOOR
AGG.	AGGREGATE
ALT.	ALTERNATE or ALTERNATIVE
ALUM.	ALUMINUM
A.DR.	ACCESS DOOR
A.P.	ACCESS PANEL
APPROX.	APPROXIMATE(LY)
ARCH.	ARCHITECTURAL/ARCHITECT
ASPH.	ASPHALT
A.C.T.	ACOUSTICAL CEILING TILE
A.C.P.	ACOUSTICAL CEILING PANEL
B	
BD.	BOARD
BITUM.	BITUMINOUS
B.L.	BRICK LEDGE
BLDG.	BUILDING
BLK.	BLOCK
BLKG.	BLOCKING
BM.	BEAM
B.O.	BOTTOM OF
BRG.	BEARING
BSMT.	BASEMENT
B.U.R.	BUILT UP ROOFING
C	
CA.	CARPET
CAB(S)	CABINET(S)
CA.T.	CARPET TILE
CA.TV.	CABLE TELEVISION
CEM.	CEMENT
CFCI	CONTRACTOR FURNISHED, CONTRACTOR INSTALLED
C.G.	CORNER GUARD
C.J.	CONTROL JOINT
CL.	CENTER LINE
CLG.	CEILING
CLO.	CLOSET
CLR.	CLEAR
C.M.U.	CONCRETE MASONRY UNIT
COL.	COLUMN
CONC.	CONCRETE
CONN.	CONNECTION
CONST.	CONSTRUCTION
CONT	CONTINUOUS
CONTR.	CONTRACTOR
CORR.	CORRIDOR
C.T.	CERAMIC TILE
CW.	CASEWORK
D	
D.	DEEP
DBL.	DOUBLE
DEG.	DEGREE
DET.	DETAIL
D.F.	DRINKING FOUNTAIN
DIA.	DIAMETER
DIAG.	DIAGONAL
DIFF.	DIFFUSOR
DIM.	DIMENSION
DISP.	DISPENSER
DN.	DOWN
DR.	DOOR
DS.	DOWNSPOUT
D.T.	DRAIN TILE
DWG(S).	DRAWING(S)
DWR.	DRAWER
E	
E.	EAST
EA.	EACH
E.C.	ELECTRICAL CONTRACTOR
E.I.F.S.	EXTERIOR INSULATION FINISH SYSTEM
E.F.	EACH FACE
E.F.S.	EXTERIOR FINISH SYSTEM
E.J.	EXPANSION JOINT
EL.	ELEVATION
ELEC.	ELECTRICAL
ELEV.	ELEVATOR
ENCL.	ENCLOSURE
ENGR.	ENGINEER
E.P.	ELECTRICAL PANEL
EQ.	EQUAL
EQUIP.	EQUIPMENT
ESMT.	EASEMENT
E.W.	EACH WAY
E.W.C.	ELECTRIC WATER COOLER
EX.	EXISTING
EXH.	EXHAUST
EXP.AGG.	EXPOSED AGGREGATE
EXP.	EXPANSION
EXT.	EXTERIOR
F	
F.	FEMALE
F.A.	FIRE ALARM
F.C.U.	FAN COIL UNIT
F.D.	FLOOR DRAIN
FDN.	FOUNDATION
F.E.	FIRE EXTINGUISHER CABINET
F.E.C.	
F.F.	FINISH FLOOR
F.G.	FINISH GRADE
F.H.	FLAT HEAD
F.H.C.	FIRE HOSE CABINET
FIN.	FINISH
FLASH.	FLASHING
FLR.	FLOOR
FLUOR.	FLUORESCENT
F.O.C.	FACE OF CONCRETE
FND.	FOUNDATION
F.P.	FABRIC PANEL
F.P.C.	FIRE PROTECTION CONTRACTOR
FR.	FRAME
F.RET.	FIRE RETARDANT
FT.	FEET (FOOT)
FTG.	FOOTING
FUR.	FURRING
FUT.	FUTURE
F.V.C.	FIRE VALVE CABINET
F.W.C.	FABRIC WALL COVERING
G	
GA.	GAGE
GALV.	GALVANIZED
G.C.	GENERAL CONTRACTOR
GL.	GLASS
GND.	GROUND
G.O.	GLASS OPENING
GR.	GRADE
G.W.B.	GYPSUM WALLBOARD
GYP.	GYPSUM
GYP.BD.	GYPSUM BOARD
H	
H.	HIGH
H.A.C.	HEATING/AIR CONDITIONING CONTRACTOR
H.B.	HOSE BIBB
HNDC.	HANDICAP
H.C.	HOLLOW CORE
HD.	HEAD
HDW.	HARDWARE
HDWD.	HARDWOOD
H.M.	HOLLOW METAL
HORIZ.	HORIZONTAL
H.P.	HIGH POINT
HR.	HOUR
HSKP.	HOUSE KEEPING
HT.	HEIGHT
HVAC	HEATING, VENTILATING AND AIR CONDITIONING
I	
I.D.	INSIDE DIAMETER
IN.	INCH
INFO.	INFORMATION
INSUL.	INSULATION
INT.	INTERIOR
J	
J.C.	JANITOR CLOSET
JST.	JOIST
JT.	JOINT
K	
KIT.	KITCHEN
L	
LAM.	LAMINATE or LAMINATED
LAV.	LAVATORY
LBR.	LUMBER
L.C.B.	LIQUID CHALK BOARD
LKR.	LOCKER
LOC.	LOCATION
L.P.	LOW POINT
LT.	LIGHT
M	
M.	MALE
MA.	MARBLE
MACH.	MACHINE
MAG.	MAGNESIUM
M.D.O.	MEDIUM DENSITY OVERLAY
MAS.	MASONRY
M.T.	MARBLE THRESHOLD
MTL.	MATERIAL
MAX.	MAXIMUM
M.B.	MOP BASIN
MECH.	MECHANICAL
MECH.CONT	MECHANICAL CONTRACTOR
MEMB.	MEMBRANE
MH.	MANHOLE
MET.	METAL
MFR.	MANUFACTURER
MIN.	MINIMUM
MISC.	MISCELLANEOUS
M.O.	MASONRY OPENING
M.P.	MOVABLE PARTITION
MTD.	MOUNTED
MTL.	METAL
MULL.	MULLION
N	
N.	NORTH
N.I.C.	NOT IN CONTRACT
NO. OR #	NUMBER
NOM.	NOMINAL
N.T.S.	NOT TO SCALE
O	
O.A.	OVER ALL
O.C.	ON CENTER
O.D.	OUTSIDE DIAMETER
OFCI	OWNER FURNISHED CONTRACTOR INSTALLED
OFF.	OFFICE
OFOI	OWNER FURNISHED OWNER INSTALLED
OH.	OVERHEAD
O.H.	OPPOSITE HAND
OPNG.	OPENING
OPP.	OPPOSITE
OZ.	OUNCE
P	
PART.	PARTICLE
PARTN.	PARTITION
P.C.	PLUMBING CONTRACTOR
PLAS.	PLASTER
PL.	PLATE
P.LAM.	PLASTIC LAMINATE
PLBG.	PLUMBING
PLYWD.	PLYWOOD
POL.	POLISHED
PORT.	PORTABLE
PR.	PAIR
PREFAB.	PREFABRICATED
PROP.	PROPERTY
P.S.F.	POUNDS PER SQUARE FOOT
P.S.I.	POUNDS PER SQUARE INCH
PT.	PAINT
PTD.	PAINTED
Q	
Q.T.	QUARRY TILE
QTR.	QUARTER
R	
R.	RISER
RAD.	RADIUS
R.D.	ROOF DRAIN
REF.	REFER TO
REFF.	REFERENCE
REFR.	REFRIGERATOR
REINF.	REINFORCING or REINFORCEMENT
REQD.	REQUIRED
RESIL.	RESILIENT
RET.	RETAINING
REV.	REVISION
R.F.	RESILIENT FLOORING
RM.	ROOM
RND.	ROUND
R.O.	ROUGH OPENING
REQD.	REQUIRED
R.B.	RESILIENT BASE
R.T.U.	ROOF TOP UNIT
S	
S.	SOUTH
S.A.B.	SOUND ATTENUATION BLANKET
SAN.	SANITARY
SCHED.	SCHEDULE
S.D.	SMOKE DETECTOR
SECT.	SECTION
S.F.	SQUARE FEET
S.F.T.U.	STRUCTURAL FACING TILE UNIT
SHR.	SHOWER
SHT.	SHEET
SHTG.	SHEATHING
SIM.	SIMILAR
SL.	SLATE
SND.	SOUND
S.P.	STAND PIPE
SP.D.	SOAP DISPENSER
SPEC.	SPECIFICATION
S.P.T.M.R.	SINGLE PLY MEMBRANE ROOFING
SPAN.	SPANDREL
SQ.	SQUARE
S.SK.	SERVICE SINK
ST.STL.	STAINLESS STEEL
STD.	STANDARD
STL.	STEEL
STOR.	STORAGE
STRUC.	STRUCTURAL
SUSP.	SUSPENDED
SYM.	SYMMETRICAL
T	
T.	TREAD
TB.	TACKBOARD
T & B.	TOP AND BOTTOM
T & G.	TONGUE AND GROOVE
TELE.	TELEPHONE
TEMP.	TEMPERED
TERR.	TERRAZZO
THK.	THICK
THRU.	THROUGH
TLT.	TOILET
T.O.	TOP OF
T.O.C.	TOP OF CURB/TOP OF CONCRETE
T.O.P.	TOP OF PAVEMENT
T.O.W.	TOP OF WALL
T.P.	TOILET PARTITION
TRANS.	TRANSFORMER
TV.	TELEVISION
TYP.	TYPICAL
U	
U.C.	UNDER CUT
U.C.L.	UNDER COUNTER LIGHT
U.C.R.	UNDER COUNTER REFRIGERATOR
U.H.	UNIT HEATER
UNFIN.	UNFINISHED
U.L.	UNDERWRITERS LABORATORY
U.N.O.	UNLESS NOTED OTHERWISE
UR.	URINAL
V	
V.	VINYL
V.C.T.	VINYL COMPOSITION TILE
V.T.	VINYL TILE
VENT.	VENTILATOR
VERT.	VERTICAL
VEST.	VESTIBULE
V.T.R.	VENT THROUGH ROOF
V.S.F.	VINYL SHEET FLOORING
V.W.C.	VINYL WALL COVERING
W	
W.	WEST
W.C.	WATER CLOSET
W.C.	WALL COVERING
W/(O)	WITH/(OUT)
WD.	WOOD
WIND.	WINDOW
W.GL.	WIRE GLASS
W.H.	WALL HYDRANT
W.O.M.	WALK OFF MAT
WP.	WATERPROOFING
W.P.	WORKING POINT
WSCOT.	WAINSCOT
WGT.	WEIGHT
W.T.H.	WATER HEATER
W.W.F.	WELDED WIRE FABRIC
W.W.MFR.	WINDOW WALL MANUFACTURER
Y	
YD.	YARD
Y.D.	YARD DRAIN
Y.H.	YARD HYDRANT

MATERIALS LEGEND

- ASPHALT
- BATT INSULATION
- BRICK
- CONCRETE
- CONCRETE MASONRY UNIT
- COMPACT GRANULAR FILL
- EARTH
- EXISTING STRUCTURE
- GYPSUM BOARD/PLASTER - ELEVATION
- INSULATION - RIGID
- PLYWOOD
- STEEL
- STONE
- WOOD FRAMING-CONTINUOUS
- WOOD BLOCKING - DISCONTINUOUS

SYMBOLS LEGEND

- SECTION DETAIL (A3 / A8.01)
- PLAN DETAIL OR ENLARGED PLAN (A3 / A8.01)
- EXTERIOR ELEVATION (A3 / A8.01)
- INTERIOR ELEVATION
- WORK POINT
- ROOM NAME / 100 — ROOM NUMBER
- A — WINDOW TYPE
- PARTITION TYPE / PARTITION SECTION — PARTITION TYPE
- DEMOLITION NOTE
- KEYED CONSTRUCTION NOTE
- KEY MATERIAL NOTES
- REVISION
- CEILING GRID START POINT
- CEILING HEIGHT/CEILING SPOT ELEVATION
- EXISTING COLUMN BUBBLE
- NEW COLUMN BUBBLE
- EQUIPMENT / FURNITURE TAG
- NORTH ARROW

PLAN LEGEND

- NEW CONSTRUCTION
- EXISTING PARTITION TO REMAIN.
- EXISTING PARTITION TO BE REMOVED.
- DOOR # SAME AS ROOM # U.N.O.
- NEW DOOR AND FRAME.
- EXISTING DOOR TO REMAIN.
- EXISTING DOOR TO BE REMOVED.
- W01 — BORROW LITE
- CONTRACT LIMIT LINE.
- 2 HOUR FIRE WALL
- 2 HOUR SEPARATION
- 1 HOUR FIRE SEPARATION
- 1 HOUR SMOKE BARRIER
- SMOKE PARTITION.
- SHEET A2.01 / SHEET A2.02 — MATCH LINE

GENERAL CONSTRUCTION NOTES

1. Dimensions noted "as required" or "verify" are to be verified with the General Contractor for final approval before final construction. Contractor is not to proceed with construction if a dimension is in question or error. Contractor shall verify all existing conditions.
2. See Partition Types Schedule for partition information and general details.
3. All Masonry is nominal thickness unless noted otherwise.
4. Refer to Structural Drawings for reinforcement in masonry walls and partitions.
5. Refer to exterior building elevations for locations of control and expansion joints.
6. Masonry openings are nominally dimensioned. Adjust masonry accordingly.
7. Refer to Room Finish Schedule for locations of concrete floor hardener/sealer.
8. Slope the floor surface to floor drains 1/8" per foot (minimum) as shown. Where floor slopes are not indicated, slope floor 1/8" per foot to drain for a minimum of 2'-0" around drain.

Fletcher:: Architects, Inc.

ARCHITECTURE ■ PLANNING ■ INTERIORS
1906 NORTH SIGNAL HILLS DRIVE
KIRKWOOD, MO. 63122
TEL. (314) 965-6333
FAX. (314) 965-8997
info@fletcher-architects.com

CONSULTANTS

CIVIL ENGINEER:
FRONTENAC ENGR. GROUP, INC.
18 SURREN DR.
ST. LOUIS, MO 63146
PHONE (314) 644-2200
FAX (314) 644-0646

STRUCT. ENGINEER:
ABS CONSULTING
1648 LACKLAND HILLS PARKWAY
ST. LOUIS, MO 63146
PHONE (314) 994-7007
FAX (314) 994-0722

M.E.P. ENGINEER:
SSC ENGINEERING
550 SPIRIT OF ST. LOUIS BLVD.
CHESTERFIELD, MO 63005
PHONE (636) 530-7770
FAX (636) 530-7677

HARDWARE CONSULTANT
5710
5566 PIERRE CT.
ST. LOUIS, MO 63129
PHONE (314) 487-7776
FAX (314) 842-2242

KITCHEN CONSULTANTS
THE GEIGER GROUP
2501 WATSON ROAD
ST. LOUIS, MO 63139
PHONE (314) 645-2807
FAX (314) 645-2208

LANDSCAPE ARCHITECT
AUSTIN TAO AND ASSOC.
2101 LOCUST, 2ND. FLOOR
ST. LOUIS, MO 63103
PHONE (314) 436-2999
FAX (314) 436-9150

INTERIOR DESIGN
O'TOOLE DESIGN ASSOC.
124 WEST JEFFERSON
KIRKWOOD, MO 63122
PHONE (314) 909-1906
FAX (314) 909-1906

PROJECT:
ADDITION AND RENOVATIONS TO
McKnight Church of Christ
2515 SOUTH MCKNIGHT ROAD
ST. LOUIS, MO 63124

THE SEAL AND SIGNATURES APPLY ONLY TO THE DOCUMENT TO WHICH THEY ARE AFFIXED, AND WE EXPRESSLY DISCLAIM ANY RESPONSIBILITY FOR ALL OTHER PLANS, SPECIFICATIONS, ESTIMATES, REPORTS, OR OTHER DOCUMENTS OR INSTRUMENTS RELATING TO OR INTENDED TO BE USED FOR ANY PART OR PARTS OF THE PROJECT.

COPYRIGHT 2002 FLETCHER ARCHITECTS, INC.

NO	DATE	REVISIONS
	00/00/01	ADDENDUM #0

PROJECT NO. 01403
SHEET NO. A0.01
DRAWN BY: SER
CHECKED BY: MEF
DATE: NOVEMBER 1, 2002

CONSTRUCTION/BID DRAWINGS

PARTITION TYPES

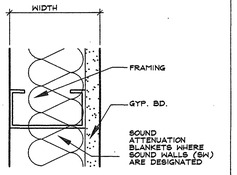

PARTITION GROUP 1

PARTITION					GYP. BD.		FRAMING		REMARKS
TYPE	WIDTH	RATING	ASSEMBLY NO.	STC	WIDTH	TYPE	SIZE	SPACING	
1A	3 1/8"	-	-	-	5/8"	-	2 1/2"	16"O.C.	
1B	4 1/4"	-	-	-	5/8"	-	3 5/8"	16"O.C.	
1C	6 1/4"	-	-	-	5/8"	-	5 5/8"	16"O.C.	

PARTITION GROUP 5

PARTITION					GYP. BD.		FRAMING		REMARKS
TYPE	WIDTH	RATING	ASSEMBLY NO.	STC	WIDTH	TYPE	SIZE	SPACING	
5A	3 1/2"	2 HR.	U.L. U438	-	1/2"	TYPE X	2 1/2"	24"O.C.	

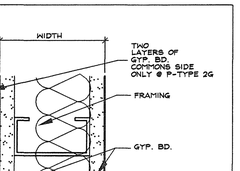

PARTITION GROUP 2

PARTITION					GYP. BD.		FRAMING		REMARKS
TYPE	WIDTH	RATING	ASSEMBLY NO.	STC	WIDTH	TYPE	SIZE	SPACING	
2A	3 3/4"	-	-	-	5/8"	-	2 1/2"	16"O.C.	
2B	4 7/8"	-	-	-	5/8"	-	3 5/8"	16"O.C.	
2C	6 7/8"	-	-	-	5/8"	-	5 5/8"	16"O.C.	
2D	3 3/4"	1 HR.	U.L. U465		5/8"	TYPE X	2 1/2"	16"O.C.	
2E	4 7/8"	1 HR.	U.L. U465		5/8"	TYPE X	3 5/8"	16"O.C.	
2F	6 7/8"	1 HR.	U.L. U465		5/8"	TYPE X	5 5/8"	16"O.C.	
2G	5 1/2"	1 HR.	U.L. U465		5/8"	TYPE X	5 5/8"	16"O.C.	
2H	4 5/8"	-	-	-	1/2"	-	3 5/8"	16"O.C.	

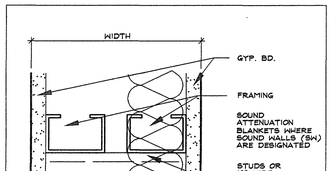

PARTITION GROUP 6

PARTITION					GYP. BD.		FRAMING		REMARKS
TYPE	WIDTH	RATING	ASSEMBLY NO.	STC	WIDTH	TYPE	SIZE	SPACING	
6A	1'-4"	-	-	-	5/8"	-	2 1/2"	16"O.C.	
6B	2'-0"	-	-	-	5/8"	-	2 1/2"	16"O.C.	
6C	2'-4"	-	-	-	5/8"	-	2 1/2"	16"O.C.	

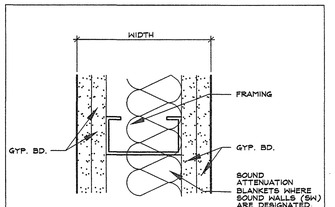

PARTITION GROUP 3

PARTITION					GYP. BD.		FRAMING		REMARKS
TYPE	WIDTH	RATING	ASSEMBLY NO.	STC	WIDTH	TYPE	SIZE	SPACING	
3A	5"	2 HR.	U.L. U475	-	5/8"	TYPE X	2 1/2"	16"O.C.	
3B	6 1/8"	2 HR.	U.L. U475	-	5/8"	TYPE X	3 5/8"	16"O.C.	
3C	8 1/8"	2 HR.	U.L. U475	-	5/8"	TYPE X	5 5/8"	16"O.C.	

PARTITION SECTIONS

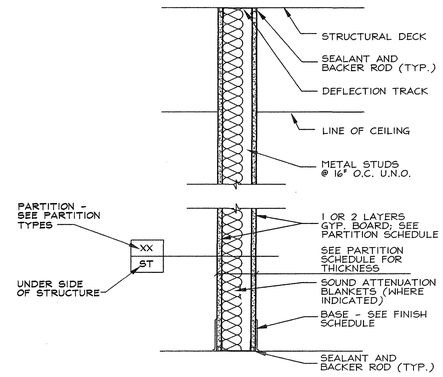

ST PRTN. TO STRUCT. DECK
1-1/2" = 1'-0"

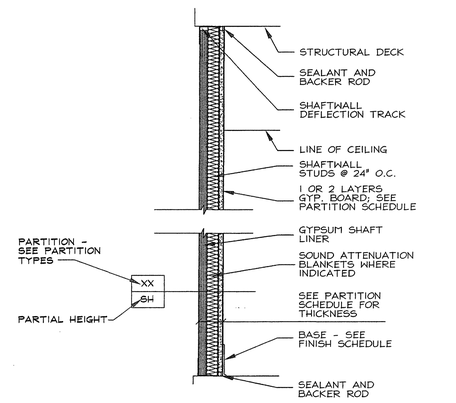

SH SHAFT WALL
1-1/2" = 1'-0"

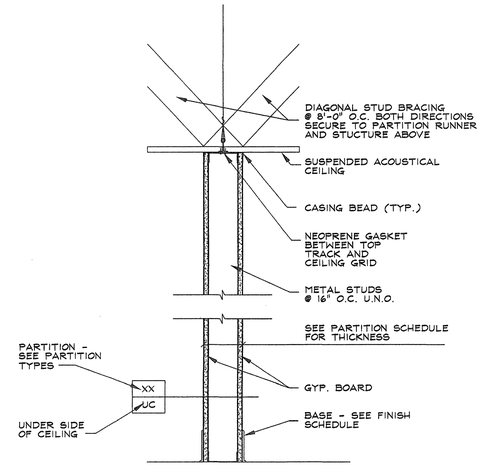

UC PRTN. TO UNDER-SIDE OF CLG. GRID
1-1/2" = 1'-0"

PARTITION NOTES

1. HEIGHTS OF PARTITION ELEMENTS ARE AS FOLLOWS: (SEE ALSO DETAIL REFERENCED.)

   TC TO 4" ABOVE CEILING GRID.
   TD TO STRUCTURAL DECK ABOVE.
   UC TO UNDERSIDE OF CEILING GRID.
   PART PARTIAL HEIGHT PARTITION.

2. PARTITION TYPE ASSEMBLIES WITH THE DESIGNATION SW (SOUND WALL) SHALL INCLUDE SOUND ATTENUATION BLANKETS. AS INDICATED ON PARTITION SECTIONS.

3. TEST NUMBERS ARE FOR UNDERWRITERS' LABORATORIES (UL) ASSEMBLIES U.N.O.

4. SEAL ALL PENETRATIONS OF FIRE-, SMOKE-, AND/OR SOUND-RATED PARTITIONS, & ALL PENETRATIONS OF CORRIDOR SIDE OF PARTITIONS DESIGNED TO RESIST PASSAGE OF SMOKE.

5. PROVIDE SOUND BATTS OF INDICATED THICKNESS ONLY WHERE PARTITION TAG SUBLETTER INDICATES SOUND BATTS

6. SEE [REFLECTED CEILING PLAN], [FLOOR PLAN], [FIRE PROTECTION PLAN] FOR LOCATIONS AND RATINGS OF SMOKE- AND FIRE-RATED PRTNS. REFERENCED TEST NUMBERS APPLY ONLY TO PARTITIONS INDICATED TO BE RATED (SEE ALSO GENERAL NOTE 3).

7. OFFSET STUDS [1"] FROM FACE OF WALL OR COLUMN (WHERE OCCURS) U.N.O. ON PLAN.

8. PARTITION THICKNESS VARIES--SEE PLANS.

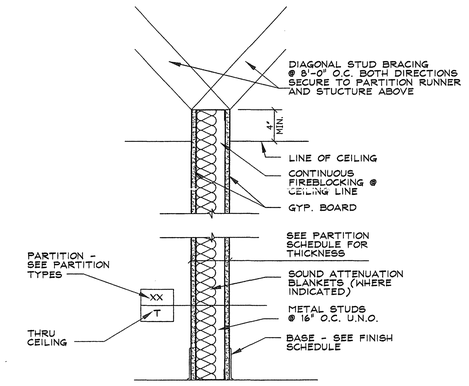

TC PRTN. THROUGH CLG. GRID
1-1/2" = 1'-0"

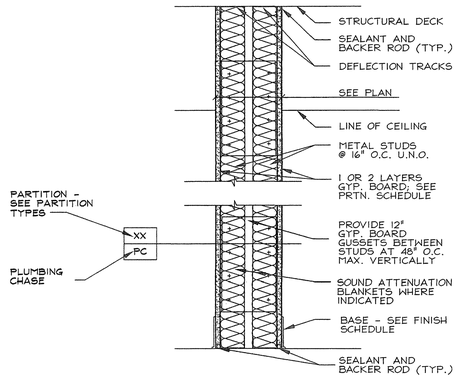

PC PLBG. CHASE
1-1/2" = 1'-0"

Fletcher::
Architects, Inc.

ARCHITECTURE ■ PLANNING ■ INTERIORS
1906 NORTH SIGNAL HILLS DRIVE
KIRKWOOD, MO. 63122
TEL. (314) 965-6333
FAX. (314) 965-8597
info@fletcher-architects.com

CONSULTANTS

CIVIL ENGINEER:
FRONTENAC ENGR. GROUP, INC.
16 SUNNEN DR.
ST. LOUIS, MO 63143
PHONE (314) 644-2200
FAX (314) 644-0845

STRUCT. ENGINEER:
ABS CONSULTING
1848 LACKLAND HILLS PARKWAY
ST. LOUIS, MO 63146
PHONE (314) 994-7007
FAX (314) 994-0722

M.E.P. ENGINEER:
SSC ENGINEERING
660 SPIRIT OF ST. LOUIS BLVD.
CHESTERFIELD, MO 63006
PHONE (636) 530-7770
FAX (636) 530-7877

HARDWARE CONSULTANT
8710
6565 PIERRE CT.
ST. LOUIS, MO 63128
PHONE (314) 487-7776
FAX (314) 845-2242

KITCHEN CONSULTANTS
THE GIEGER GROUP
5501 WATSON ROAD
ST. LOUIS, MO 63139
PHONE (314) 645-2087
FAX (314) 645-3208

LANDSCAPE ARCHITECT
AUSTIN TAO. AND ASSOC.
2101 LOCUST, 2ND. FLOOR
ST. LOUIS, MO 63103
PHONE (314) 436-3998
FAX (314) 436-9130

INTERIOR DESIGN
OTOOLE DESIGN ASSOC.
124 WEST JEFFERSON
KIRKWOOD, MO 63122
PHONE (314) 909-9905
FAX (314) 909-1906

PROJECT:
ADDITION AND RENOVATIONS TO
McKnight Road
Church of Christ
2515 SOUTH MCKNIGHT ROAD
ST. LOUIS, MO 63124

THE SEAL AND SIGNATURES APPLY ONLY TO THE DOCUMENTS TO WHICH THEY ARE AFFIXED, AND WE EXPRESSLY DISCLAIM ANY RESPONSIBILITY FOR ALL OTHER PLANS, SPECIFICATIONS, ESTIMATES, REPORTS, OR OTHER DOCUMENTS OR INSTRUMENTS RELATING TO OR INTENDED TO BE USED FOR ANY PART OR PARTS OF THE PROJECT.

COPYRIGHT 2002 FLETCHER ARCHITECTS, INC.

NO	DATE	REVISIONS
	00/00/01	ADDENDUM #0

PROJECT NO. 01403
DRAWN BY: SER
CHECKED BY: MEF
DATE: NOVEMBER 1, 2002

SHEET NO. A0.02

CONSTRUCTION/BID DRAWINGS

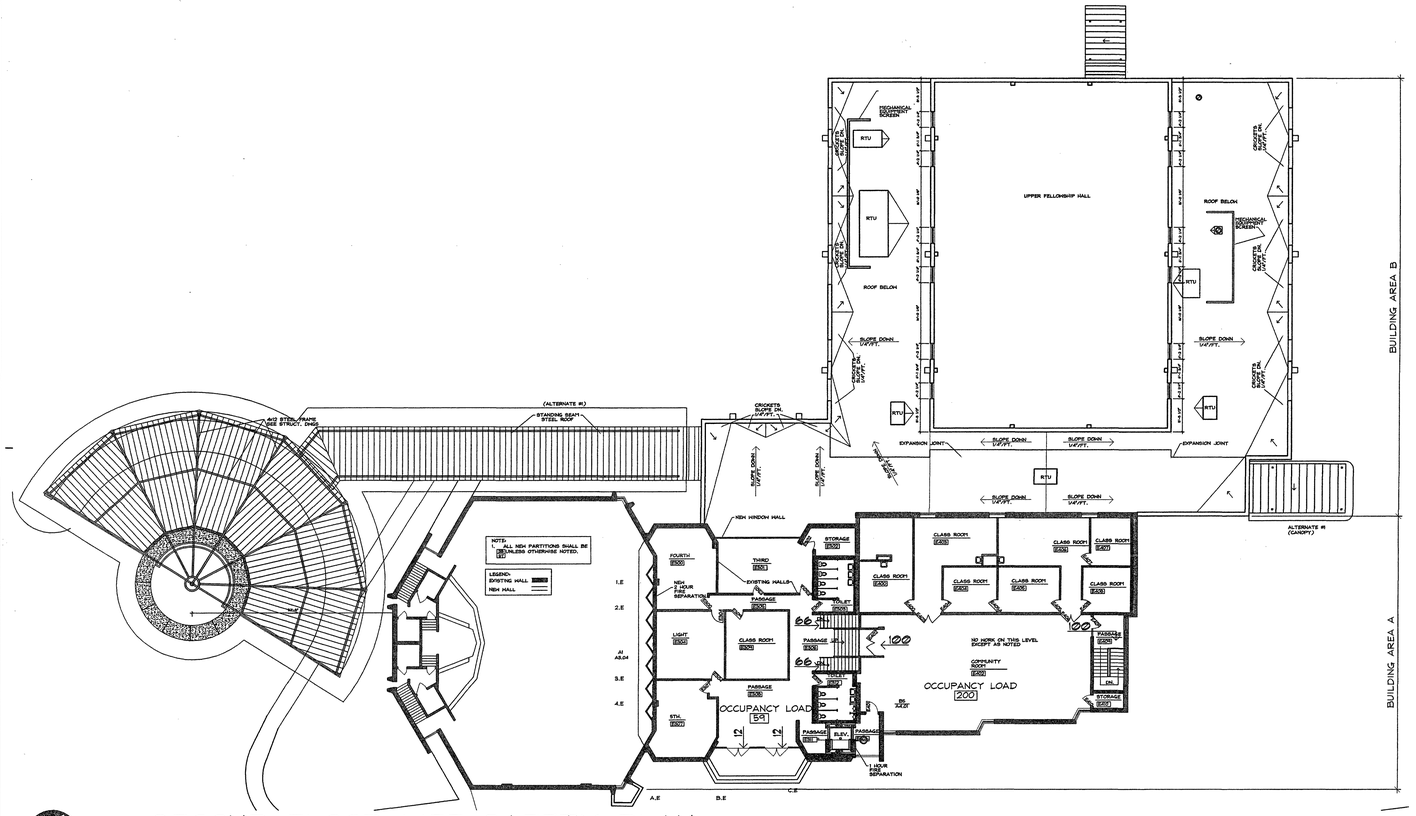

C1 A0.03 SECOND FLOOR LIFE SAFETY PLAN 1/16"=1'-0"

NORTH

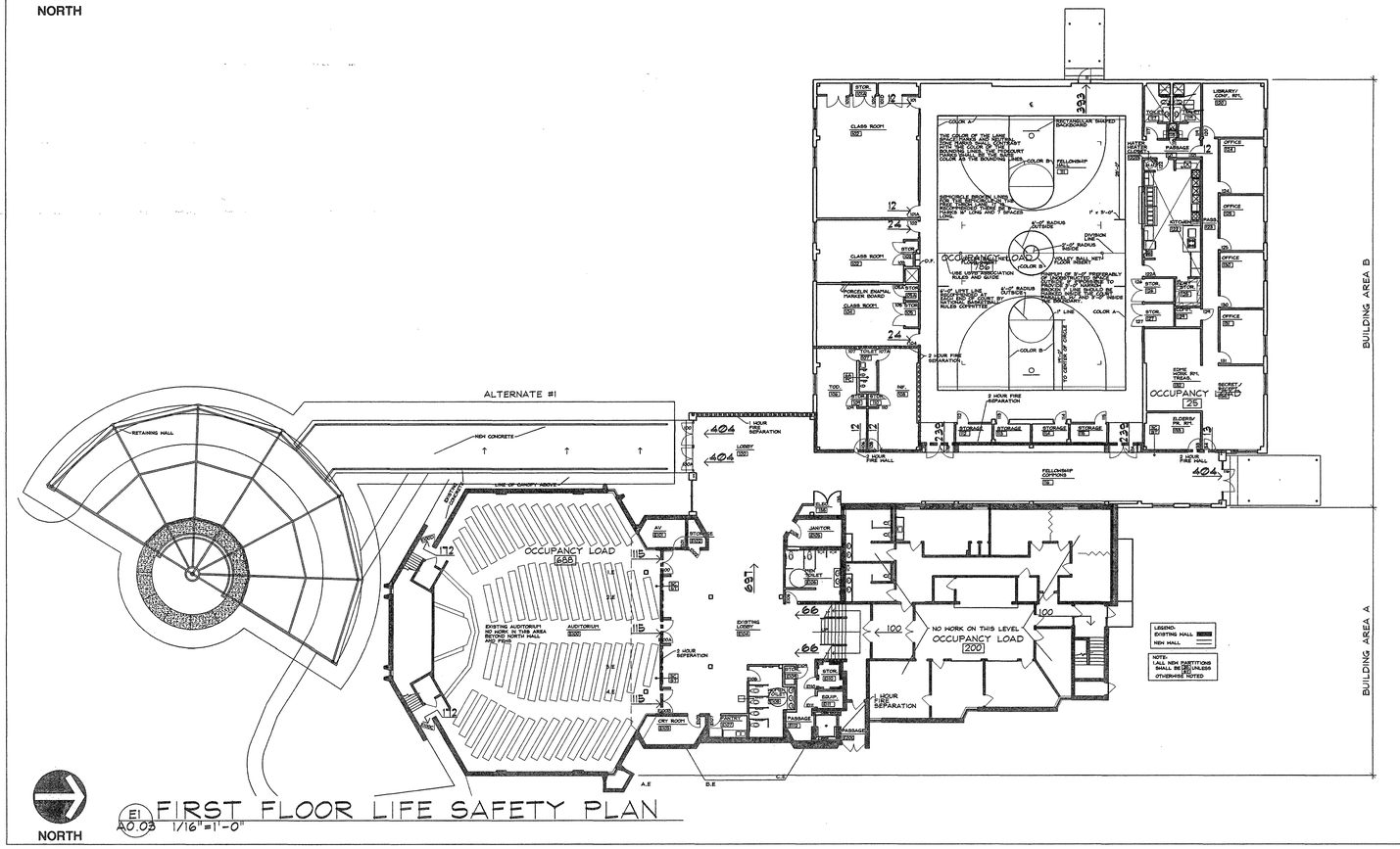

E1 A0.03 FIRST FLOOR LIFE SAFETY PLAN 1/16"=1'-0"

NORTH

CODE ABSTRACT:

CODE ABSTRACT

APPLICABLE CODES (WHERE MORE THAN ONE CODE IS LISTED, MOST STRINGENT REQUIREMENTS APPLY, EXCEPT BY AGREEMENT OF THE CODE OFFICIAL) :

ARCHITECTURAL/STRUCTRUAL	1996 BOCA NATIONAL BUILDING CODE
MECHANICAL:	ST. LOUIS COUNTY
PLUMBING:	ST. LOUIS COUNTY
ELECTRICAL:	ST. LOUIS COUNTY

BUILDING AREA "A" (EXISTING BUILDING)

CONSTRUCTION TYPE (BOCA):	2C
USE GROUP CLASSIFICATIONS (BOCA):	A-4
TABLE 505 (MIXED USE A-4 CONTROLS)	
ALLOWABLE AREA	14,400 SQ. FT.
OPEN PERIMETER INCREASE	1.68
TOTAL ALLOWABLE AREA	24,192 SQ. FT.
TABLE 313.1.2	
FIRE AREA ONE	4,813 SQ. FT.
FIRE AREA TWO	6,780 SQ. FT.
TOTAL ACTUAL AREA	11,593 SQ. FT.
904.2	
NO FIRE AREA IS OVER 12,000 SQ. FT.	
TABLE 503	
ALLOWBLE HEIGHT	30'
ACTUAL HEIGHT	30'
TABLE 503	
ALLOWBLE NUMBER OF STORIES	2
ACTUAL NUMBER OF STORIES	2
OCCUPANT LOAD	
ASSEMBLY A-4	686 PERSONS
EDUCATIONAL	459 PERSONS
TOTAL NUMBER OF OCCUPANTS	1,147 PERSONS

BUILDING AREA "B"

CONSTRUCTION TYPE (BOCA):	2C
USE GROUP CLASSIFICATIONS (BOCA):	A-3
TABLE 505	
ALLOWABLE AREA	8,400 SQ. FT.
OPEN PERIMETER INCREASE	1.34
TOTAL ALLOWABLE AREA	11,256 SQ. FT.
TABLE 313.1.2	
FIRE AREA ONE	10,921 SQ. FT.
FIRE AREA TWO	672 SQ. FT.
TOTAL ACTUAL AREA	11,593 SQ. FT.
TABLE 503	
ALLOWBLE HEIGHT	30'
ACTUAL HEIGHT	30'
TABLE 503	
ALLOWBLE NUMBER OF STORIES	2
ACTUAL NUMBER OF STORIES	1
OCCUPANT LOAD	
ASSEMBLY A-3 (ASSEMBLY CONCENTRATED CHAIRS)	786 PERSONS
BUSINESS	25 PERSONS
EDUCATIONAL	95 PERSONS
TOTAL NUMBER OF OCCUPANTS	906 PERSONS

NOTE:
1. ALL NEW PARTITIONS SHALL BE 2HR UNLESS OTHERWISE NOTED. ST

2 HOUR FIRE WALL

2 HOUR FIRE SEPARATION

1 HOUR FIRE SEPARATION

Fletcher :: Architects, Inc.

ARCHITECTURE ■ PLANNING ■ INTERIORS
1906 NORTH SIGNAL HILLS DRIVE
KIRKWOOD, MO. 63122
TEL. (314) 965-6333
FAX. (314) 965-8997
info@fletcher-architects.com

CONSULTANTS

CIVIL ENGINEER:
FRONTENAC ENGR. GROUP, INC.
18 GUNNEN DR.
ST. LOUIS, MO 63143
PHONE (314) 644-2200
FAX (314) 644-0845

STRUCT. ENGINEER:
ABS CONSULTING
1848 LACKLAND HILLS PARKWAY
ST. LOUIS, MO 63146
PHONE (314) 994-7007
FAX (314) 994-0722

M.E.P. ENGINEER:
SSC ENGINEERING
650 SPIRIT OF ST. LOUIS BLVD.
CHESTERFIELD, MO 63005
PHONE (636) 530-7770
FAX (636) 530-7877

HARDWARE CONSULTANT
6710
5656 PIERRE CT.
ST. LOUIS, MO 63128
PHONE (314) 487-7776
FAX (314) 842-2242

KITCHEN CONSULTANTS
THE GEDDES GROUP
2601 WATSON ROAD
ST. LOUIS, MO 63139
PHONE (314) 645-2667
FAX (314) 645-2208

LANDSCAPE ARCHITECT
AUSTIN TAO AND ASSOC.
2101 LOCUST, 2ND. FLOOR
ST. LOUIS, MO 63103
PHONE (314) 436-3999
FAX (314) 436-0130

INTERIOR DESIGN
O'DOOLE DESIGN ASSOC.
124 WEST JEFFERSON
KIRKWOOD, MO 63122
PHONE (314) 909-1905
FAX (314) 909-1908

PROJECT:
ADDITION AND RENOVATIONS TO
McKnight Road Church of Christ
2515 SOUTH MCKNIGHT ROAD
ST. LOUIS, MO 63124

THE SEAL AND SIGNATURES APPLY ONLY TO THE DOCUMENT TO WHICH THEY ARE AFFIXED, AND WE EXPRESSLY DISCLAIM ANY RESPONSIBILITY FOR ALL REVISIONS TO PLANS, SPECIFICATIONS, ESTIMATES, REPORTS, OR OTHER DOCUMENTS OR INSTRUMENTS RELATING TO OR INTENDED TO BE USED FOR ANY PART OR PARTS OF THE PROJECT.

COPYRIGHT 2002 FLETCHER ARCHITECTS, INC.

NO	DATE	REVISIONS
	00/00/01	ADDENDUM #0

PROJECT NO. 01403
DRAWN BY: SER
CHECKED BY: MEF
DATE: NOVEMBER 1, 2002

SHEET NO. A0.03

CONSTRUCTION/BID DRAWINGS

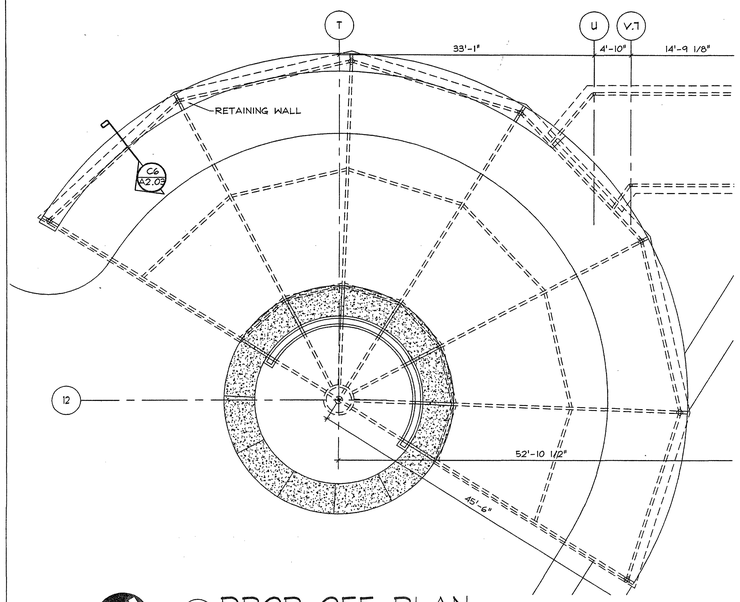

NORTH

B1 A2.0 DROP OFF PLAN
1/8" = 1'-0" (ALTERNATE 1)

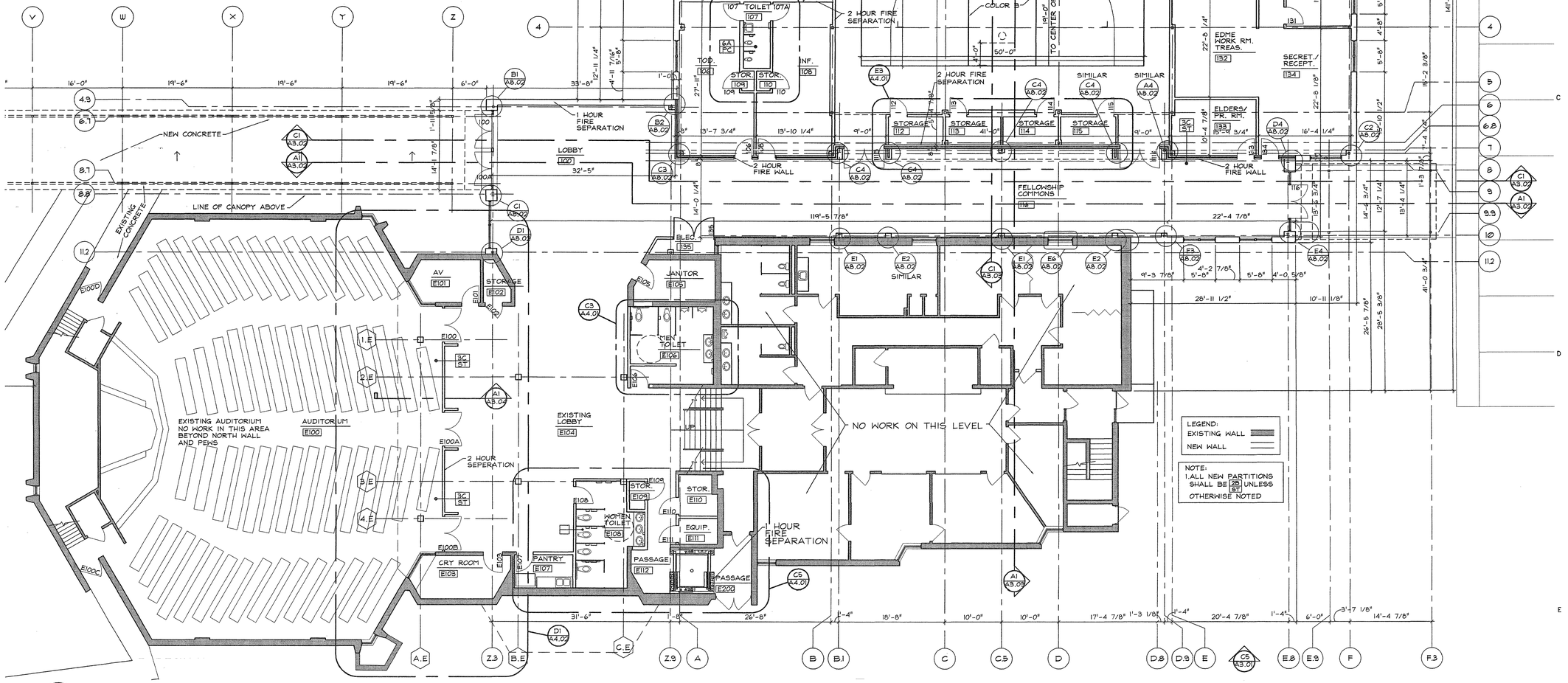

NORTH

A3 A2.0 FIRST FLOOR PLAN
1/8" = 1'-0"

Fletcher:: Architects, Inc.

ARCHITECTURE ■ PLANNING ■ INTERIORS
1906 NORTH SIGNAL HILLS DRIVE
KIRKWOOD, MO. 63122
TEL. (314) 965-6333
FAX. (314) 965-8997
info@fletcher-architects.com

CONSULTANTS

CIVIL ENGINEER:
FRONTENAC ENGR. GROUP, INC.
16 SUNNEN DR.
ST. LOUIS, MO 63143
PHONE (314) 644-2200
FAX (314) 644-0645

STRUCT. ENGINEER:
ABS CONSULTING
1848 LACKLAND HILLS PARKWAY
ST. LOUIS, MO 63146
PHONE (314) 994-7007
FAX (314) 994-0722

M.E.P. ENGINEER:
SSC ENGINEERING
550 SPERT OF ST. LOUIS BLVD.
CHESTERFIELD, MO 63005
PHONE (636) 530-7770
FAX (636) 530-7877

HARDWARE CONSULTANT
8710
5555 PIERRE CT.
ST. LOUIS, MO 63128
PHONE (314) 487-7776
FAX (314) 843-2343

KITCHEN CONSULTANTS
THE GEIGER GROUP
3501 WATSON ROAD
ST. LOUIS, MO 63139
PHONE (314) 645-2007
FAX (314) 645-3208

LANDSCAPE ARCHITECT
AUSTIN TAO AND ASSOC.
2101 LOCUST, 2ND. FLOOR
ST. LOUIS, MO 63103
PHONE (314) 436-3999
FAX (314) 436-9130

INTERIOR DESIGN
O'TOOLE DESIGN ASSOC.
124 WEST JEFFERSON
KIRKWOOD, MO 63122
PHONE (314) 909-9005
FAX (314) 909-1909

PROJECT:
ADDITION AND RENOVATIONS TO
McKnight Road
Church of Christ
2515 SOUTH MCKNIGHT ROAD
ST. LOUIS, MO 63124

THE SEAL AND SIGNATURES APPLY ONLY TO THE DOCUMENT TO WHICH THEY ARE AFFIXED, AND WE EXPRESSLY DISCLAIM ANY RESPONSIBILITY FOR ALL OTHER PLANS, SPECIFICATIONS, ESTIMATES, REPORTS OR OTHER DOCUMENTS OR INSTRUMENTS RELATING TO OR INTENDED TO BE USED FOR ANY PART OR PARTS OF THE PROJECT.

COPYRIGHT 2002 FLETCHER ARCHITECTS, INC.

NO	DATE	REVISIONS
	00/00/01	ADDENDUM #0

PROJECT NO. 01403
DRAWN BY: SER
CHECKED BY: MEF
DATE: NOVEMBER 1, 2002

SHEET NO. A2.01

CONSTRUCTION/BID DRAWINGS

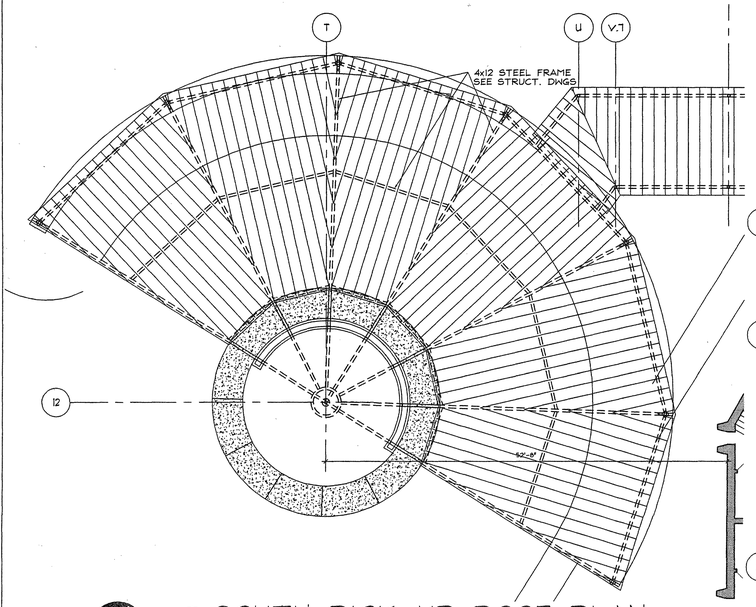

NORTH

E1 A2.02 1/8" = 1'-0"

SOUTH PICK-UP ROOF PLAN (ALTERNATE #1)

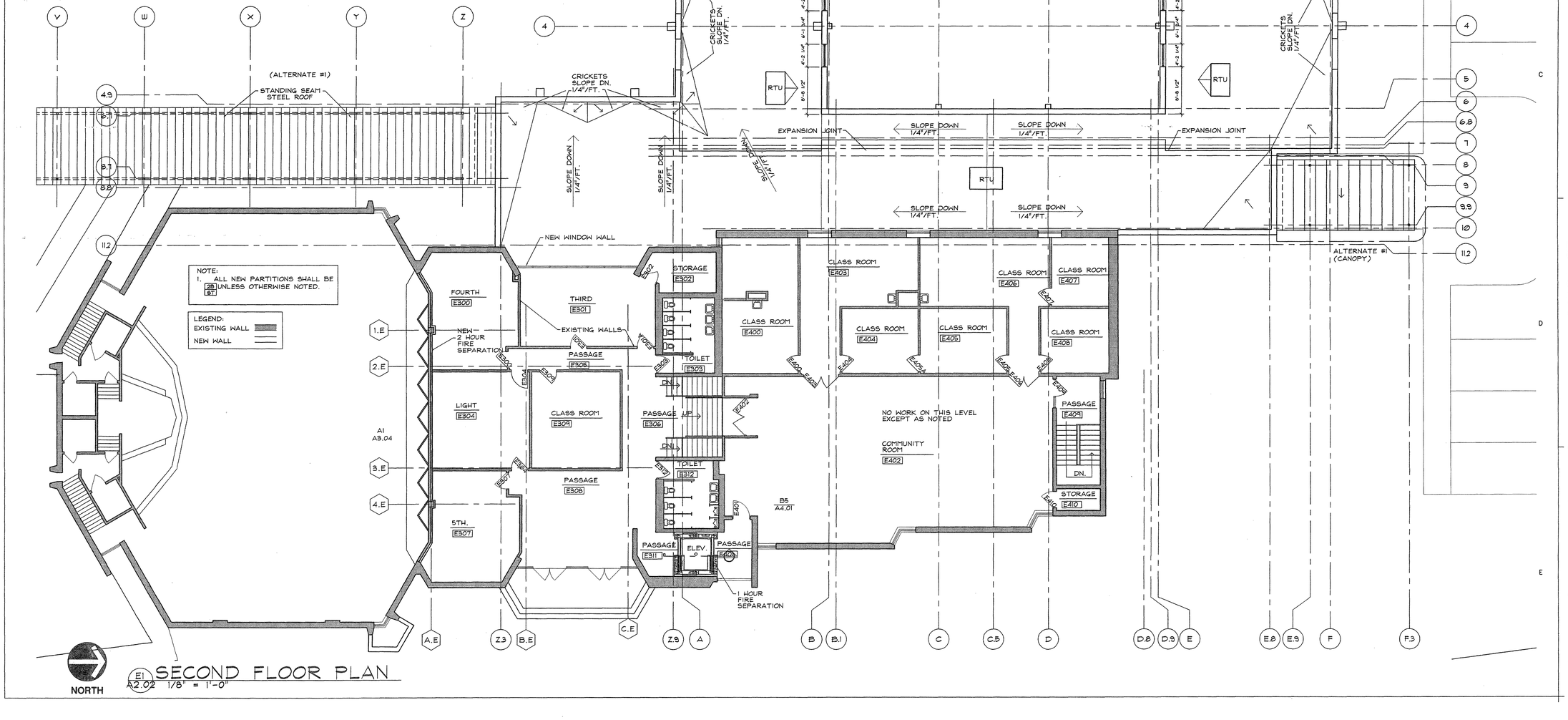

NORTH

E1 A2.02 1/8" = 1'-0"

SECOND FLOOR PLAN

Fletcher:: Architects, Inc.

ARCHITECTURE ■ PLANNING ■ INTERIORS
1906 NORTH SIGNAL HILLS DRIVE
KIRKWOOD, MO. 63122
TEL. (314) 965-6333
FAX. (314) 965-8997
info@fletcher-architects.com

CONSULTANTS

CIVIL ENGINEER:
FRONTENAC ENGR. GROUP, INC.
15 SUNNEN DR.
ST. LOUIS, MO 63143
PHONE (314) 644-2200
FAX (314) 644-0646

STRUCT. ENGINEER:
ABB CONSULTING
1548 LACKLAND HILLS PARKWAY
ST. LOUIS, MO 63146
PHONE (314) 994-7007
FAX (314) 994-0722

M.E.P. ENGINEER:
SSC ENGINEERING
550 SPIRIT OF ST. LOUIS BLVD.
CHESTERFIELD, MO 63005
PHONE (636) 530-7770
FAX (636) 530-7877

HARDWARE CONSULTANT
STO
5555 PIERRE CT.
ST. LOUIS, MO 63125
PHONE (314) 487-7776
FAX (314) 842-2242

KITCHEN CONSULTANTS
THE GEIGER GROUP
3501 WATSON ROAD
ST. LOUIS, MO 63139
PHONE (314) 645-2997
FAX (314) 645-3208

LANDSCAPE ARCHITECT
AUSTIN TAO. AND ASSOC.
2101 LOCUST, 2ND. FLOOR
ST. LOUIS, MO 63103
PHONE (314) 436-5999
FAX (314) 436-0100

INTERIOR DESIGN
OTOOLE DESIGN ASSOC.
124 WEST JEFFERSON
KIRKWOOD, MO 63122
PHONE (314) 909-1905
FAX (314) 909-1906

PROJECT:
ADDITION AND RENOVATIONS TO
McKnight Road
Church of Christ
2515 SOUTH MCKNIGHT ROAD
ST. LOUIS, MO 63124

THE SEAL AND SIGNATURES APPLY ONLY TO THE DOCUMENT TO WHICH THEY ARE AFFIXED, AND WE EXPRESSLY DISCLAIM ANY RESPONSIBILITY FOR ALL OTHER PLANS, SPECIFICATIONS, ESTIMATES, REPORTS, OR OTHER DOCUMENTS OR INSTRUMENTS RELATING TO OR INTENDED TO BE USED FOR ANY PART OR PARTS OF THE PROJECT.

COPYRIGHT 2002 FLETCHER ARCHITECTS, INC.

NO	DATE	REVISIONS
	02/01/01	ADDENDUM #0

PROJECT NO. 01403
SHEET NO. A2.02
DRAWN BY: SER
CHECKED BY: MEF
DATE: NOVEMBER 1, 2002

CONSTRUCTION/BID DRAWINGS

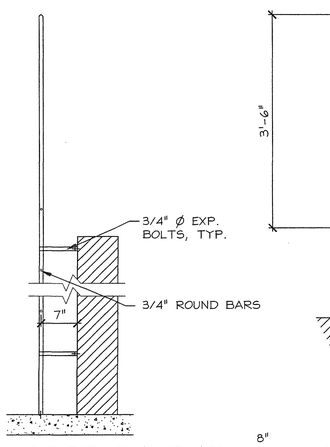

A1 A2.03 SECTION THRU ROOF LADDER 1" = 1'-0"

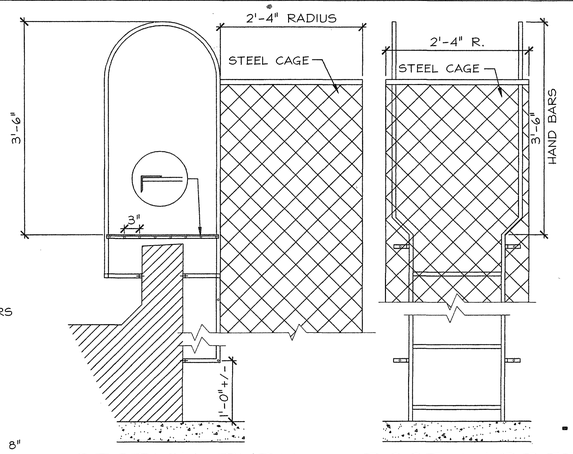

A2 A2.03 SECTION THRU ROOF LADDER 1" = 1'-0"

A3 A2.03 ROOF LADDER ELEVATION 1" = 1'-0"

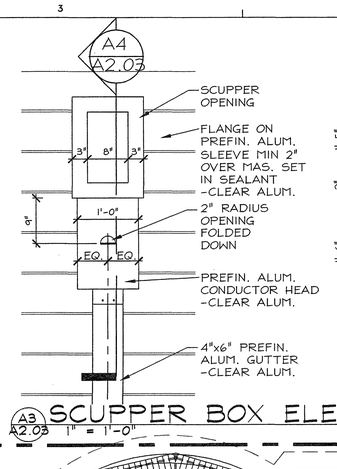

A3 A2.03 SCUPPER BOX ELEV. 1" = 1'-0"

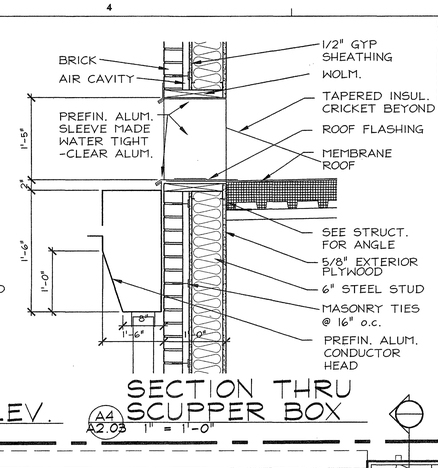

A4 A2.03 SECTION THRU SCUPPER BOX 1" = 1'-0"

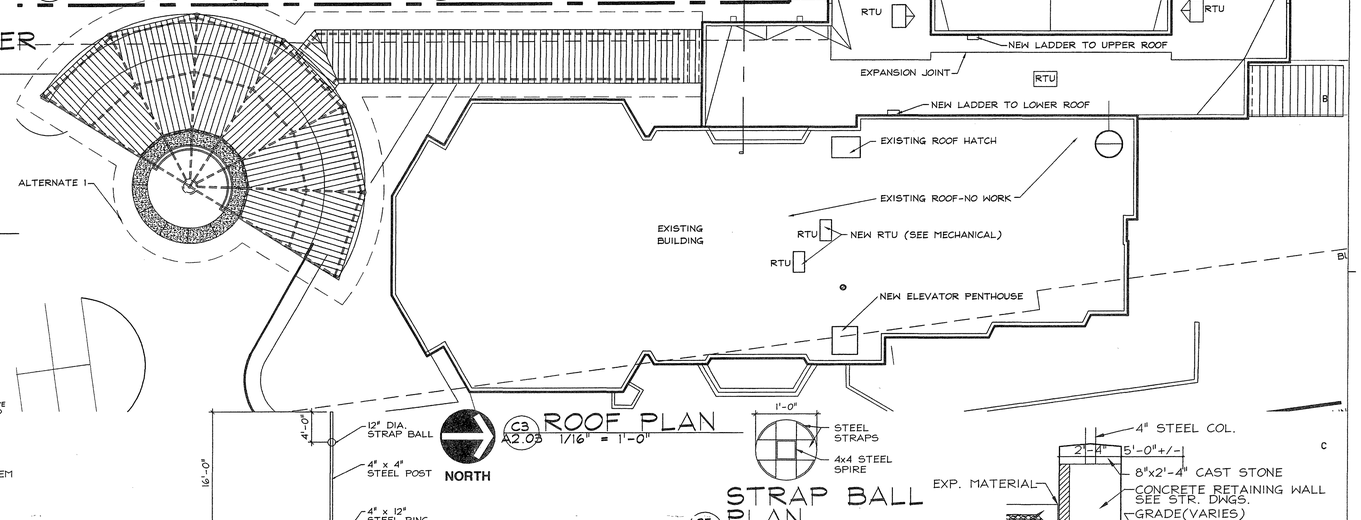

B3 A2.03 ROOF LADDER PLAN 1" = 1'-0"

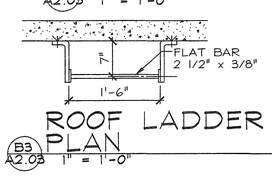

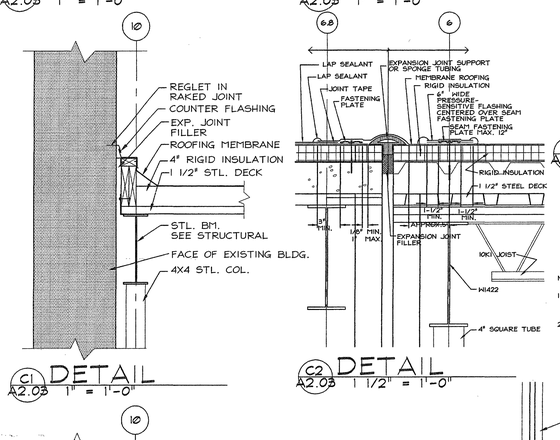

C1 A2.03 DETAIL 1" = 1'-0"

C2 A2.03 DETAIL 1 1/2" = 1'-0"

NOTES:

1. PRIMER MUST BE APPLIED TO MEMBRANE SURFACE PRIOR TO APPLYING PRESSURE- SENSITIVE FLASHING OR SPLICING TAPE.
2. LAP SEALANT MUST BE APPLIED ALONG PRESSURE-SENSITIVE FLASHING AND SPLICING TAPE AT INTERSECTIONS WITH FIELD SPLICES AND FLASHING OVERLAPS AS SHOWN ABOVE.

C3 A2.03 ROOF PLAN 1/16" = 1'-0"

STRAP BALL PLAN

C5 A2.03 1" = 1'-0"

C6 A2.03 RETAINING WALL/BENCH 1/2" = 1'-0"

D3 A2.03 DROP-OFF ELEVATION 1/8" = 1'-0"

STRAP BALL ELEVATION

D6 A2.03 1" = 1'-0"

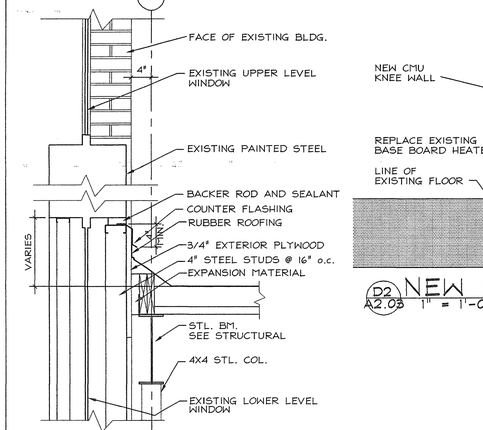

D1 A2.03 DETAIL 1" = 1'-0"

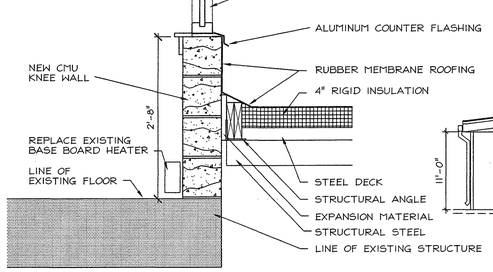

D2 A2.03 NEW CMU KNEE WALL 1" = 1'-0"

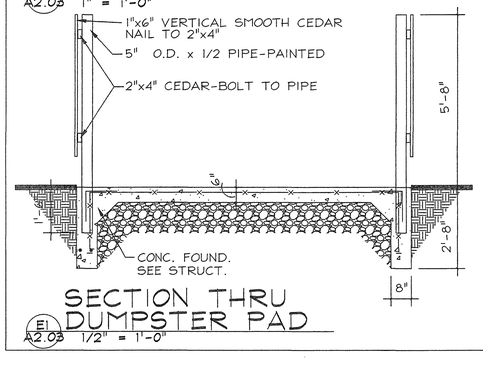

E1 A2.03 SECTION THRU DUMPSTER PAD 1/2" = 1'-0"

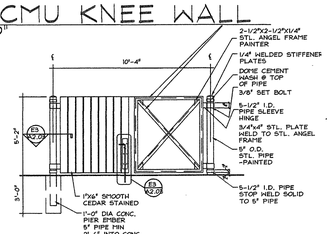

C2 A2.03 DUMPSTER GATE ELEVATION 1/4" = 1'-0"

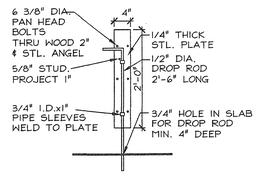

E2 A2.03 GATE DETAIL NTS

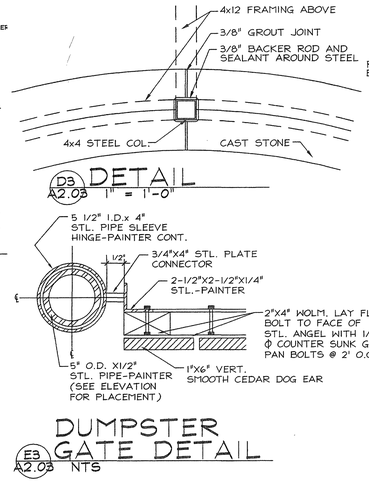

D3 A2.03 DETAIL 1" = 1'-0"

DUMPSTER GATE DETAIL

E3 A2.03 NTS

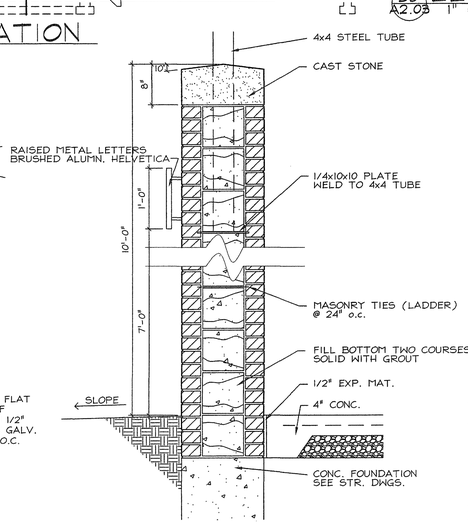

E4 A2.03 SECTION THRU CANOPY SUPPORT COL. 1" = 1'-0"

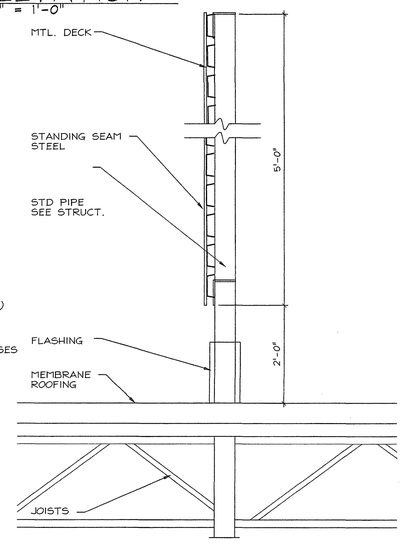

E5 A2.03 MECH. EQUIPMENT SCREEN 1" = 1'-0"

Fletcher:: Architects, Inc.

ARCHITECTURE ■ PLANNING ■ INTERIORS
1906 NORTH SIGNAL HILLS DRIVE
KIRKWOOD, MO. 63122
TEL. (314) 965-6333
FAX. (314) 965-8997
info@fletcher-architects.com

CONSULTANTS

CIVIL ENGINEER:
FRONTENAC ENGR. GROUP, INC.
16 SUNNEN DR.
ST. LOUIS, MO 63143
PHONE (314) 644-2200
FAX (314) 644-0645

STRUCT. ENGINEER:
ABS CONSULTING
1948 LACKLAND HILLS PARKWAY
ST. LOUIS, MO 63146
PHONE (314) 994-7007
FAX (314) 994-0722

M.E.P. ENGINEER:
SDC ENGINEERING
550 SPIRIT OF ST. LOUIS BLVD.
CHESTERFIELD, MO 63005
PHONE (636) 530-7770
FAX (636) 530-7877

HARDWARE CONSULTANT
5710
5555 PIERRE CT.
ST. LOUIS, MO 63128
PHONE (314) 487-7776
FAX (314) 842-2442

KITCHEN CONSULTANTS
THE GEIGER GROUP
3501 WATSON ROAD
ST. LOUIS, MO 63139
PHONE (314) 645-2987
FAX (314) 645-2308

LANDSCAPE ARCHITECT
AUSTIN TAO, AND ASSOC.
201 LOCUST, 2ND. FLOOR
ST. LOUIS, MO 63101
PHONE (314) 436-3099
FAX (314) 436-9130

INTERIOR DESIGN
O'TOOLE DESIGN ASSOC.
124 WEST JEFFERSON
KIRKWOOD, MO 63122
PHONE (314) 909-1906
FAX (314) 909-1908

PROJECT: ADDITION AND RENOVATIONS TO

McKnight Road Church of Christ

2515 SOUTH MCKNIGHT ROAD
ST. LOUIS, MO 63124

THE SEAL AND SIGNATURES APPLY ONLY TO THE DOCUMENT TO WHICH THEY ARE AFFIXED, AND WE EXPRESSLY DISCLAIM ANY RESPONSIBILITY FOR ALL OTHER PLANS, SPECIFICATIONS, ESTIMATES, REPORTS, OR OTHER DOCUMENTS OR INSTRUMENTS RELATING TO OR INTENDED TO BE USED FOR ANY PART OR PARTS OF THE PROJECT.

COPYRIGHT 2002 FLETCHER ARCHITECTS, INC.

NO	DATE	REVISIONS
	00/00/01	ADDENDUM #0

PROJECT NO. 01403
DRAWN BY: SER
CHECKED BY: MEF
DATE: NOVEMBER 1, 2002

SHEET NO. A2.03

CONSTRUCTION/BID DRAWINGS

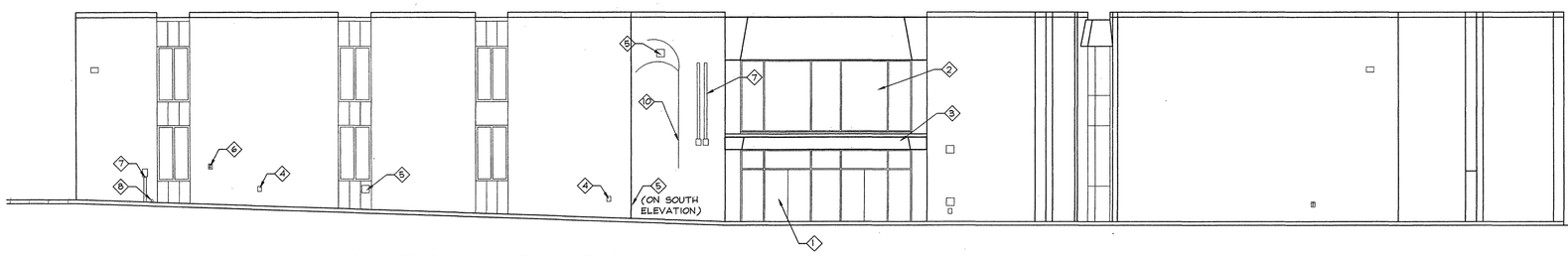

A1 A3.00 WEST DEMOLITION ELEVATION
1/8" = 1'-0"

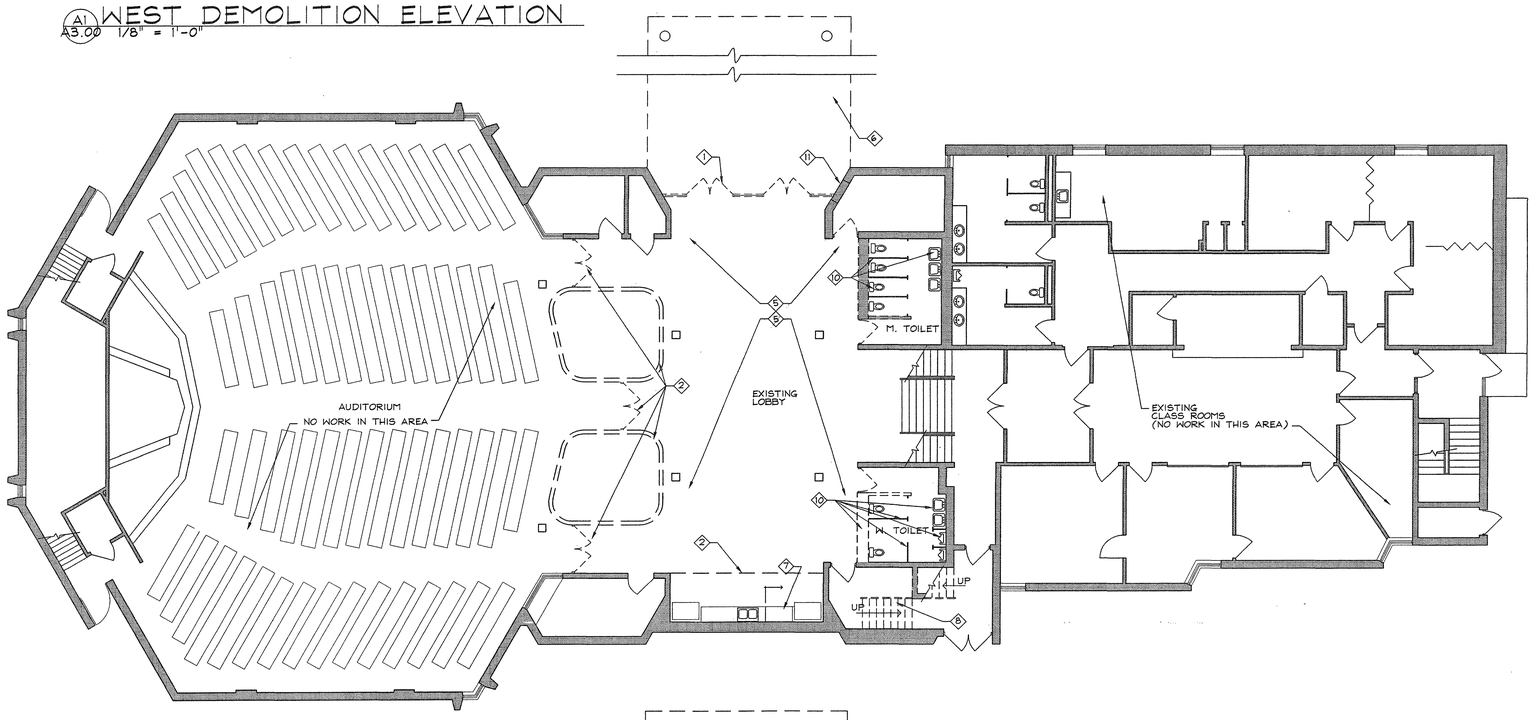

B2 A3.00 FIRST FLOOR DEMOLITION PLAN
1/8" = 1'-0"

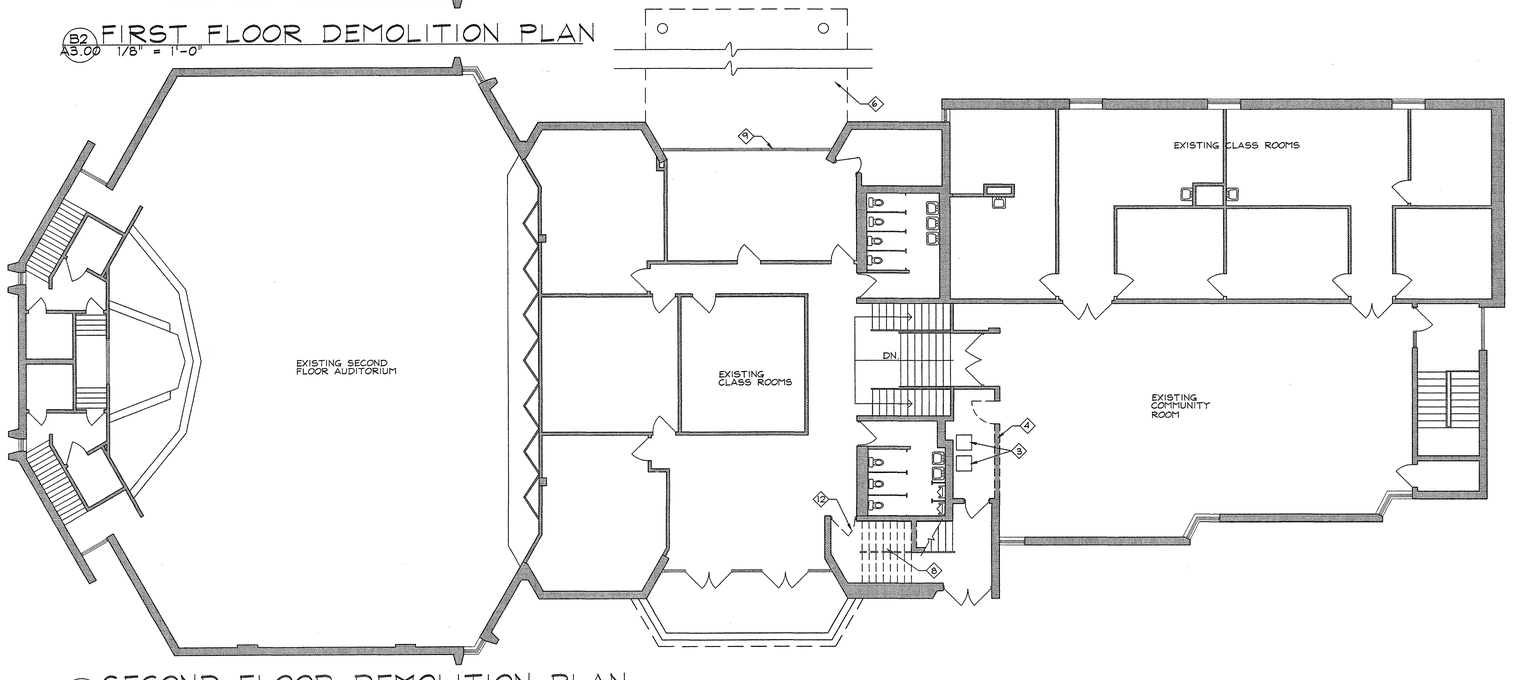

D2 A3.00 SECOND FLOOR DEMOLITION PLAN
1/8" = 1'-0"

◇ DEMOLITION NOTES:

1. REMOVE EXISTING DOOR, FRAMES, SIDELIGHTS AND, TRANSOMS.
2. REMOVE EXISTING WINDOW.
3. REMOVE EXISTING CANOPY. (SEE PLAN)
4. REMOVE EXISTING HOSE BIB
5. REMOVE EXISTING VENT
6. REMOVE EXISTING WP DUPLEX ELECTRICAL OUTLET
7. REMOVE EXISTING CONDUIT BOX AND CONDUIT
8. REMOVE EXISTING CAST IRON DRAIN PIPE
9. REMOVE EXISTING LIGHT FIXTURE
10. REMOVE EXISTING COMMUNACATIONS CABLE

◇ DEMOLITION NOTES:

1. REMOVE EXISTING DOOR, FRAMES, AND GLASS SIDELIGHTS.
2. REMOVE EXISTING FOLDING PARTITIONS AND DOORS.
3. REMOVE EXISTING HVAC EQUIPMENT. (SEE HVAC DRAWINGS)
4. REMOVE EXISTING WALLS, DOORS, AND SINKS (SEE PLUMBING).
5. REMOVE EXISTING FLOORING. (BY OWNER)
6. REMOVE EXISTING CANOPY.
7. REMOVE EXISTING CABINETS. (BY OWNER)
8. REMOVE STEEL STAIR AND CONCRETE WALL AS REQUIRED FOR ELEVATION ERECTION.
9. REMOVE EXISTING WINDOW
10. REMOVE EXISTING WALL AND PLUMBING INCLUDING TOILET PARTITIONS
11. REMOVE MASONRY FOR NEW DOOR
12. REMOVE EXISTING DOOR AND FRAME

LEGEND

EXISTING WALL TO REMAIN

EXISTING WALL REMOVED

Fletcher:: Architects, Inc.

ARCHITECTURE ■ PLANNING ■ INTERIORS
1906 NORTH SIGNAL HILLS DRIVE
KIRKWOOD, MO. 63122
TEL. (314) 965-6333
FAX. (314) 965-8997
info@fletcher-architects.com

CONSULTANTS

CIVIL ENGINEER:
FRONTENAC ENGR. GROUP, INC.
16 SUNNEN DR.
ST. LOUIS, MO 63143
PHONE (314) 644-2200
FAX (314) 644-0846

STRUCT. ENGINEER:
ABS CONSULTING
1648 LACKLAND HILLS PARKWAY
ST. LOUIS, MO 63146
PHONE (314) 994-7007
FAX (314) 994-0722

M.E.P. ENGINEER:
SSC ENGINEERING
660 SPIRIT OF ST. LOUIS BLVD.
CHESTERFIELD, MO 63005
PHONE (636) 530-7770
FAX (636) 530-7577

HARDWARE CONSULTANT
8710
5555 PIERRE CT.
ST. LOUIS, MO 63128
PHONE (314) 487-7776
FAX (314) 842-2242

KITCHEN CONSULTANTS
THE GEIGER GROUP
5501 WATSON ROAD
ST. LOUIS, MO 63139
PHONE (314) 645-2687
FAX (314) 645-3208

LANDSCAPE ARCHITECT
AUSTIN TAO AND ASSOC.
2101 LOCUST, 2ND. FLOOR
ST. LOUIS, MO 63103
PHONE (314) 436-3399
FAX (314) 436-9130

INTERIOR DESIGN
OTOOLE DESIGN ASSOC.
124 WEST JEFFERSON
KIRKWOOD, MO 63122
PHONE (314) 909-1905
FAX (314) 909-1906

PROJECT:
ADDITION AND RENOVATIONS TO
McKnight Road Church of Christ
2515 SOUTH MCKNIGHT ROAD
ST. LOUIS, MO 63124

THE SEAL AND SIGNATURES APPLY ONLY TO THE DOCUMENT AS ORIGINALLY ISSUED AND THE ARCHITECT EXPRESSLY DISCLAIMS ANY RESPONSIBILITY FOR ALL OTHER PLANS, SPECIFICATIONS, ESTIMATES, REPORTS, OR OTHER DOCUMENTS OR INSTRUMENTS RELATING TO OR INTENDED TO BE USED FOR ANY PART OR PARTS OF THE PROJECT.

COPYRIGHT 2002 FLETCHER ARCHITECTS, INC.

NO	DATE	REVISIONS
	00/00/01	ADDENDUM #0

PROJECT NO. 01403
DRAWN BY: SER
CHECKED BY: MEF
DATE: NOVEMBER 1, 2002

SHEET NO. A3.00

CONSTRUCTION/BID DRAWINGS

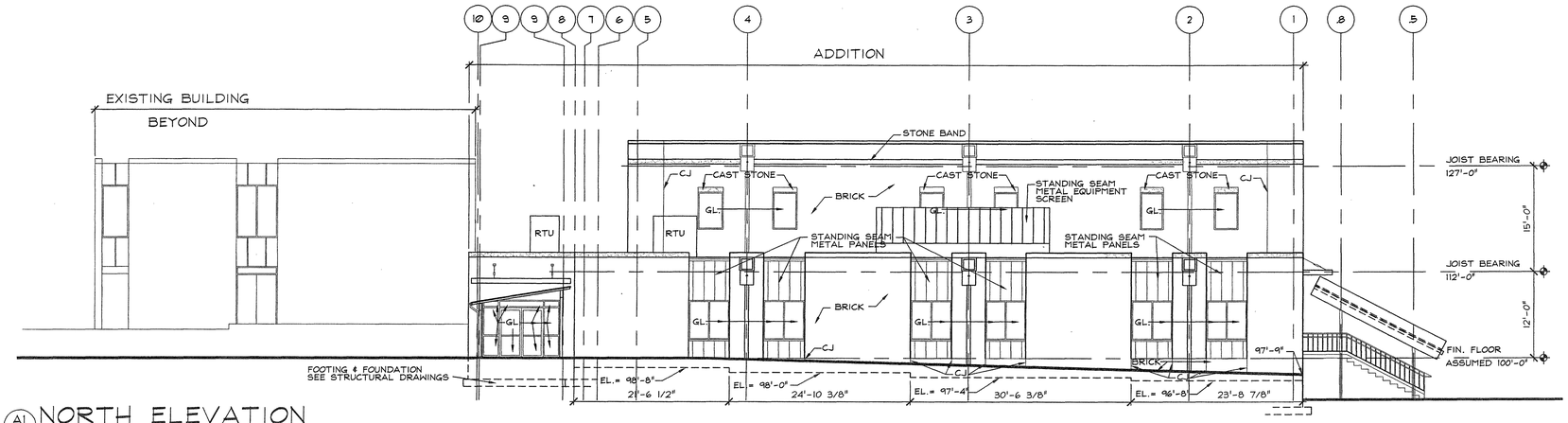

A1 A3.01 NORTH ELEVATION
1/8" = 1'-0"

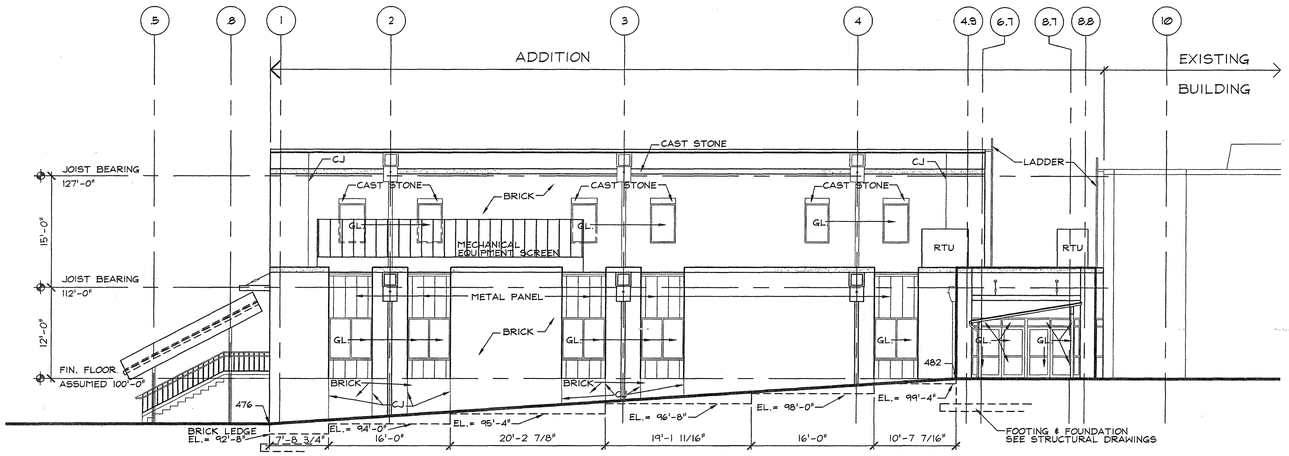

C1 A3.01 SOUTH ELEVATION
1/8" = 1'-0"

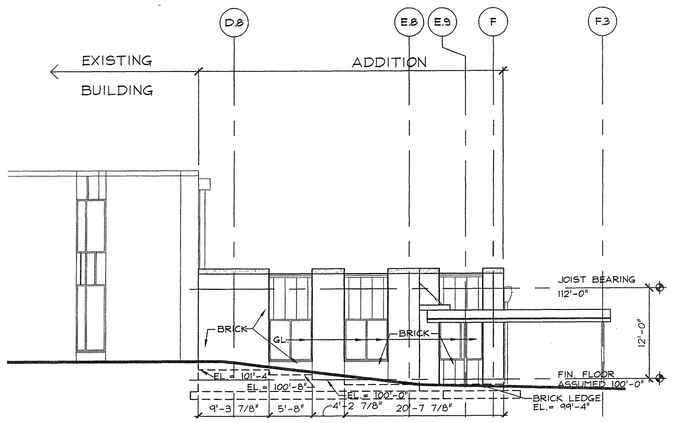

C5 A3.01 EAST ELEVATION
1/8" = 1'-0"

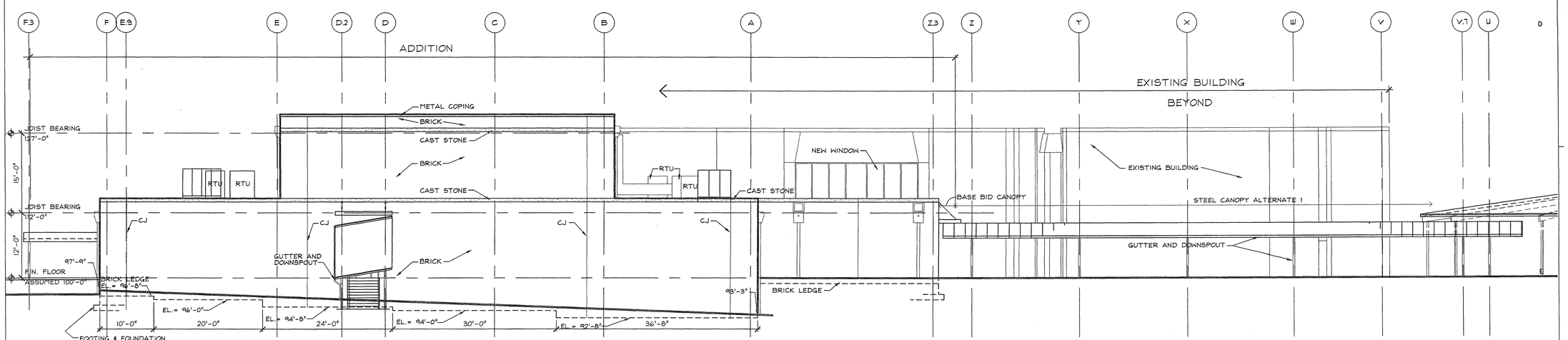

E1 A3.02 WEST ELEVATION
1/8" = 1'-0"

Fletcher:: Architects, Inc.

ARCHITECTURE ■ PLANNING ■ INTERIORS
1906 NORTH SIGNAL HILLS DRIVE
KIRKWOOD, MO. 63122
TEL. (314) 965-6333
FAX. (314) 965-8997
info@fletcher-architects.com

CONSULTANTS

CIVIL ENGINEER:
FRONTENAC ENGR. GROUP, INC.
15 SUNKEN DR.
ST. LOUIS, MO 63143
PHONE (314) 644-2200
FAX (314) 644-0845

STRUCT. ENGINEER:
ABS CONSULTING
1648 LACKLAND HILLS PARKWAY
ST. LOUIS, MO 63146
PHONE (314) 994-7007
FAX (314) 994-0722

M.E.P. ENGINEER:
SSO ENGINEERING
550 SPIRIT OF ST. LOUIS BLVD.
CHESTERFIELD, MO 63006
PHONE (636) 530-7770
FAX (636) 530-7877

HARDWARE CONSULTANT
STO
5566 PIERRE CT.
ST. LOUIS, MO 63128
PHONE (314) 487-7776
FAX (314) 842-2242

KITCHEN CONSULTANTS
THE EGGERS GROUP
3501 WATSON ROAD
ST. LOUIS, MO 63139
PHONE (314) 846-2087
FAX (314) 846-3306

LANDSCAPE ARCHITECT
AUSTIN TAO, AND ASSOC.
2101 LOCUST, 2ND. FLOOR
ST. LOUIS, MO 63103
PHONE (314) 436-3999
FAX (314) 436-9150

INTERIOR DESIGN
OTOOLE DESIGN ASSOC.
124 WEST JEFFERSON
KIRKWOOD, MO 63122
PHONE (314) 909-1906
FAX (314) 909-1906

PROJECT:
ADDITION AND RENOVATIONS TO
McKnight Road
Church of Christ
2515 SOUTH MCKNIGHT ROAD
ST. LOUIS, MO 63124

THE SEAL AND SIGNATURES APPLY ONLY TO THE DOCUMENT TO WHICH THEY ARE AFFIXED, AND WE EXPRESSLY DISCLAIM ANY RESPONSIBILITY FOR ALL OTHER PLANS, SPECIFICATIONS, ESTIMATES, REPORTS, OR OTHER DOCUMENTS OR INSTRUMENTS RELATING TO OR INTENDED TO BE USED FOR ANY PART OR PARTS OF THE PROJECT.

COPYRIGHT 2002 FLETCHER ARCHITECTS, INC.

NO	DATE	REVISIONS
	00/00/01	ADDENDUM #0

PROJECT NO. 01403
DRAWN BY: SER
CHECKED BY: MEF
DATE: NOVEMBER 1, 2002

SHEET NO. A3.01

CONSTRUCTION/BID DRAWINGS

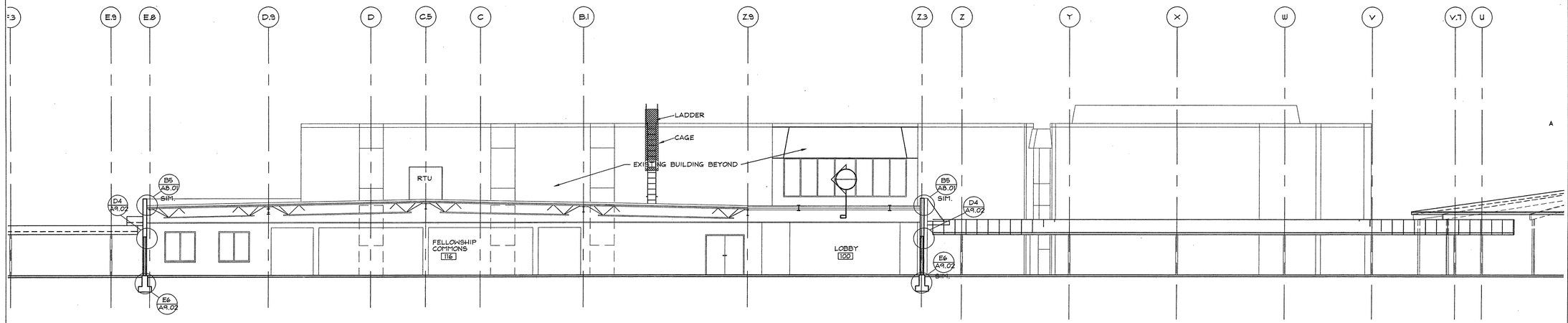

A1 BUILDING SECTION THRU FELLOWSHIP COMMONS LOOKING EAST
A3.02 1/8" = 1'-0"

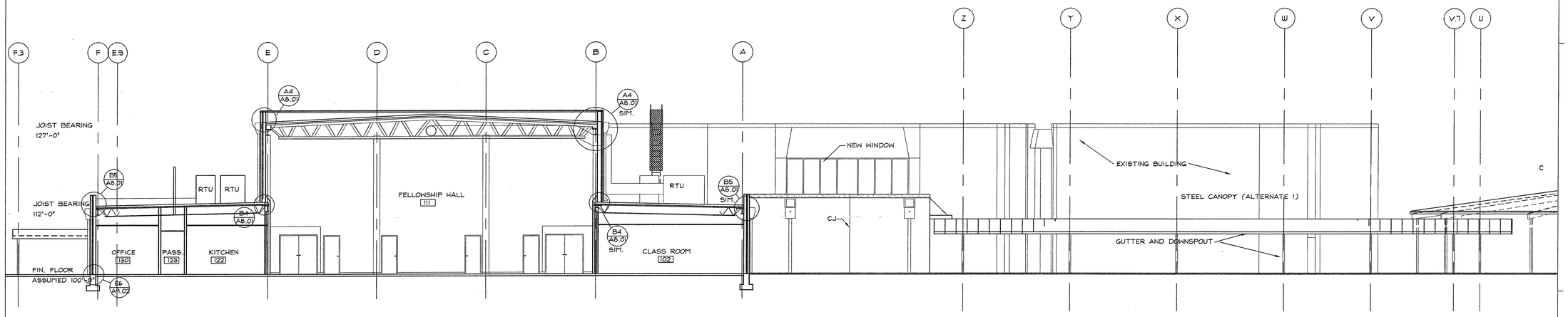

C1 BUILDING SECTION THRU FELLOWSHIP HALL LOOKING EAST
A3.02 1/8" = 1'-0"

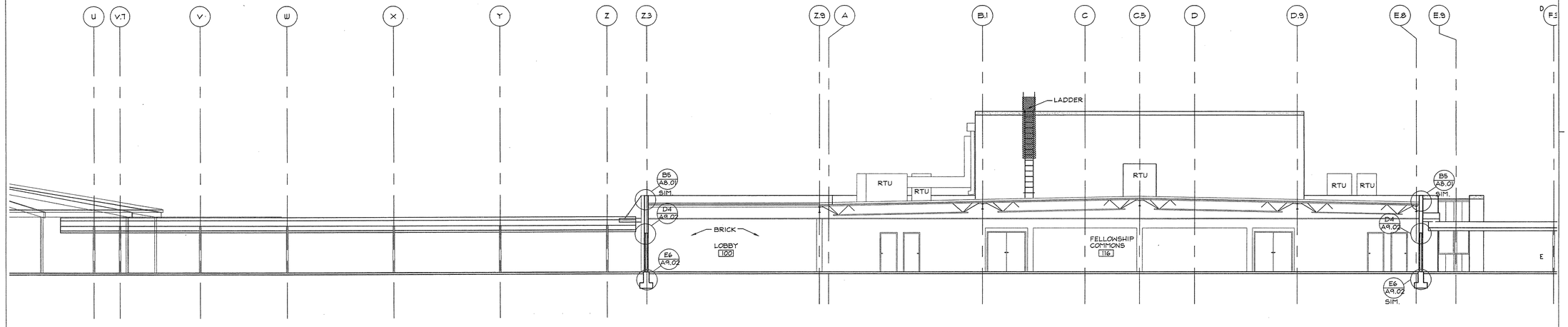

E1 BUILDING SECTION THRU FELLOWSHIP COMMONS LOOKING WEST
A3.02 1/8" = 1'-0"

Fletcher:: Architects, Inc.

ARCHITECTURE ■ PLANNING ■ INTERIORS
1906 NORTH SIGNAL HILLS DRIVE
KIRKWOOD, MO. 63122
TEL. (314) 965-6333
FAX. (314) 965-8997
info@fletcher-architects.com

CONSULTANTS

CIVIL ENGINEER:
FRONTENAC ENGR. GROUP, INC.
18 SUNNEN DR.
ST. LOUIS, MO 63143
PHONE (314) 644-2200
FAX (314) 644-0845

STRUCT. ENGINEER:
ABS CONSULTING
1948 LACKLAND HILLS PARKWAY
ST. LOUIS, MO 63146
PHONE (314) 994-7007
FAX (314) 994-0722

M.E.P. ENGINEER:
SSC ENGINEERING
650 SPIRIT OF ST. LOUIS BLVD.
CHESTERFIELD, MO 63005
PHONE (636) 530-7770
FAX (636) 530-7877

HARDWARE CONSULTANT
8710
6565 PIERRE CT.
ST. LOUIS, MO 63128
PHONE (314) 487-7778
FAX (314) 845-2243

KITCHEN CONSULTANTS
THE GEIGER GROUP
3901 WATSON ROAD
ST. LOUIS, MO 63139
PHONE (314) 645-2087
FAX (314) 645-3108

LANDSCAPE ARCHITECT
AUSTIN TAO, AND ASSOC.
2101 LOCUST, 2ND. FLOOR
ST. LOUIS, MO 63103
PHONE (314) 436-5999
FAX (314) 436-9130

INTERIOR DESIGN
O'TOOLE DESIGN ASSOC.
124 WEST JEFFERSON
KIRKWOOD, MO 63122
PHONE (314) 909-1906
FAX (314) 909-1908

PROJECT:
ADDITION AND RENOVATIONS TO
McKnight Road Church of Christ
2515 SOUTH MCKNIGHT ROAD
ST. LOUIS, MO 63124

THE SEAL AND SIGNATURES APPLY ONLY TO THE DOCUMENT TO WHICH THEY ARE AFFIXED, AND WE EXPRESSLY DISCLAIM ANY RESPONSIBILITY FOR ALL OTHER PLANS, SPECIFICATIONS, ESTIMATES, REPORTS, OR OTHER DOCUMENTS OR INSTRUMENTS RELATING TO OR INTENDED TO BE USED FOR ANY PART OR PARTS OF THE PROJECT.

COPYRIGHT 2002 FLETCHER ARCHITECTS, INC.

NO	DATE	REVISIONS
	00/00/01	ADDENDUM #0

PROJECT NO. 01403
DRAWN BY: SER
CHECKED BY: MEF
DATE: NOVEMBER 1, 2002

SHEET NO. A3.02

CONSTRUCTION/BID DRAWINGS

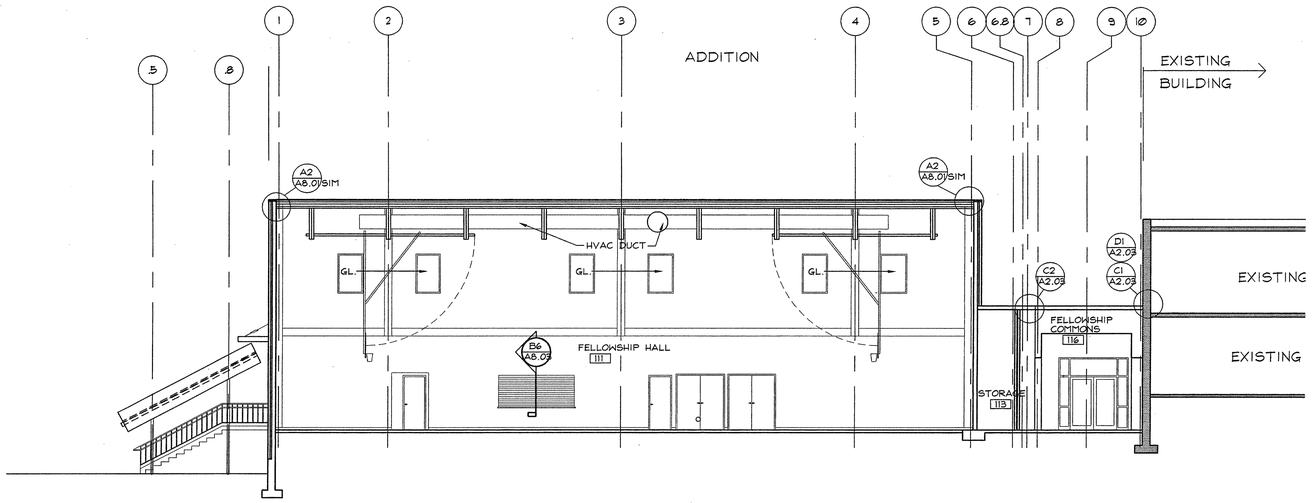

A1 A5.03 BUILDING SECTION THRU FELLOWSHIP HALL LOOKING NORTH
1/8" = 1'-0"

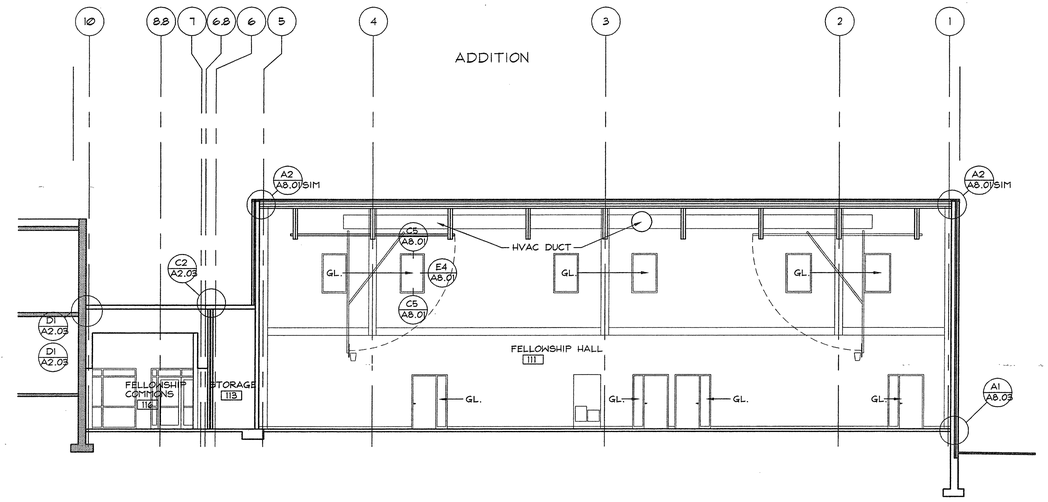

C1 A5.03 BUILDING SECTION THRU FELLOWSHIP HALL LOOKING SOUTH
1/8" = 1'-0"

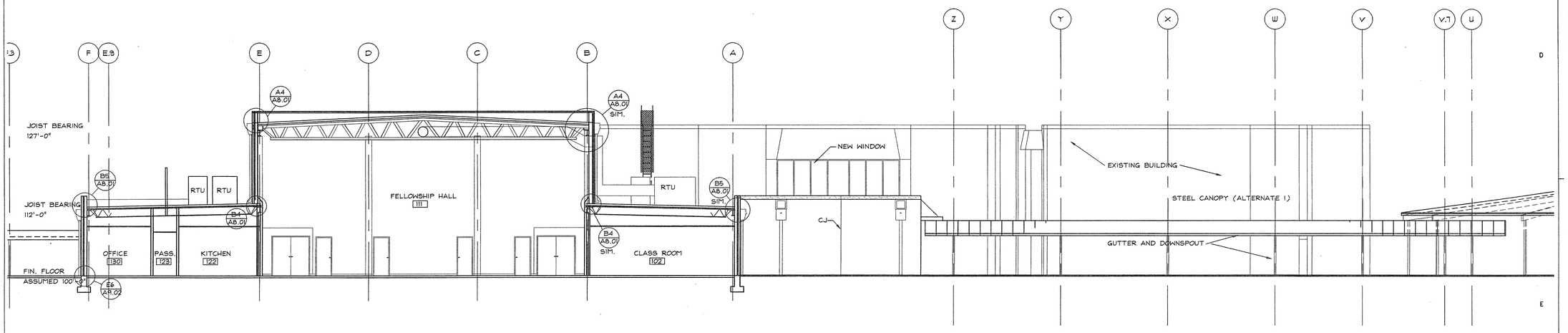

E1 A5.03 BUILDING SECTION THRU FELLOWSHIP HALL LOOKING EAST
1/8" = 1'-0"

Fletcher:: Architects, Inc.

ARCHITECTURE ■ PLANNING ■ INTERIORS
1906 NORTH SIGNAL HILLS DRIVE
KIRKWOOD, MO. 63122
TEL. (314) 965-6333
FAX. (314) 965-8997
info@fletcher-architects.com

CONSULTANTS

CIVIL ENGINEER:
FRONTENAC ENGR. GROUP, INC.
18 SUNNEN DR.
ST. LOUIS, MO 63143
PHONE (314) 644-2200
FAX (314) 644-0845

STRUCT. ENGINEER:
ABS CONSULTING
1948 LACKLAND HILLS PARKWAY
ST. LOUIS, MO 63146
PHONE (314) 994-7007
FAX (314) 994-0722

M.E.P. ENGINEER:
SSC ENGINEERING
550 SPIRIT OF ST. LOUIS BLVD.
CHESTERFIELD, MO 63005
PHONE (636) 530-7770
FAX (636) 530-7877

HARDWARE CONSULTANT
8710
5656 PIERRE CT.
ST. LOUIS, MO 63128
PHONE (314) 487-7779
FAX (314) 842-2342

KITCHEN CONSULTANTS
THE GEIGER GROUP
3501 WATSON ROAD
ST. LOUIS, MO 63139
PHONE (314) 645-2087
FAX (314) 645-3208

LANDSCAPE ARCHITECT
AUSTIN TAO AND ASSOC.
2101 LOCUST, 2ND. FLOOR
ST. LOUIS, MO 63103
PHONE (314) 436-3099
FAX (314) 436-9150

INTERIOR DESIGN
OTOOLE DESIGN ASSOC.
124 WEST JEFFERSON
KIRKWOOD, MO 63122
PHONE (314) 909-1905
FAX (314) 909-1906

PROJECT:
ADDITION AND RENOVATIONS TO
McKnight Road
Church of Christ
2515 SOUTH MCKNIGHT ROAD
ST. LOUIS, MO 63124

THE SEAL AND SIGNATURES APPLY ONLY TO THE DOCUMENT TO WHICH THEY ARE AFFIXED, AND WE EXPRESSLY DISCLAIM RESPONSIBILITY FOR ALL OTHER PLANS, SPECIFICATIONS, ESTIMATES, REPORTS, OR OTHER DOCUMENTS OR INSTRUMENTS RELATING TO OR INTENDED TO BE USED FOR ANY PART OR PARTS OF THE PROJECT.

COPYRIGHT 2002 FLETCHER ARCHITECTS, INC.

NO	DATE	REVISIONS
	00/00/01	ADDENDUM #0

PROJECT NO. 01403
DRAWN BY: SER
CHECKED BY: MEF
DATE: NOVEMBER 1, 2002

SHEET NO. A3.03

CONSTRUCTION/BID DRAWINGS

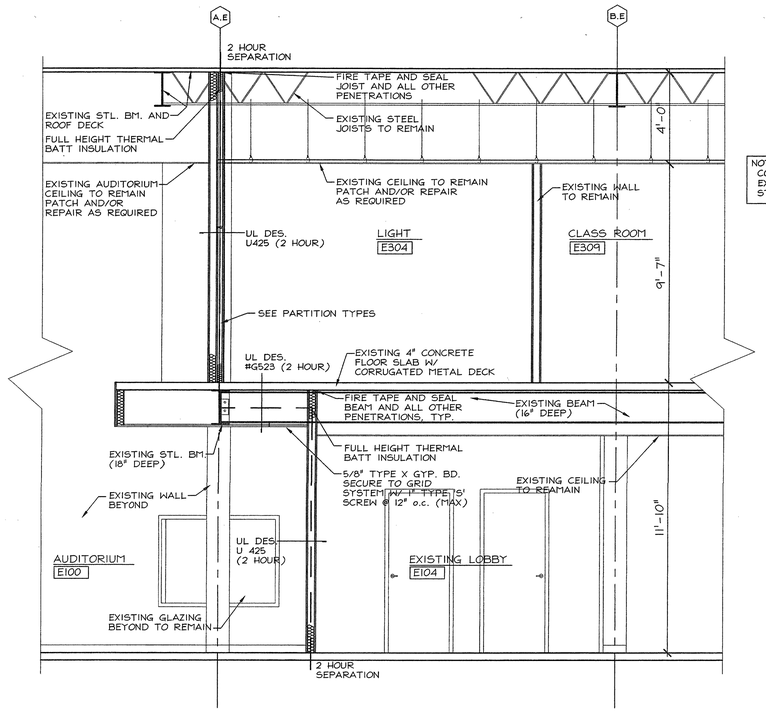

NOTE:
CONTRACTOR SHOULD VERIFY ALL EXISTING CONDITIONS BEFORE STARTING NEW CONSTRUCTION.

A1 SECTION THRU AUDITORIUM
A3.04 3/8" = 1'-0"

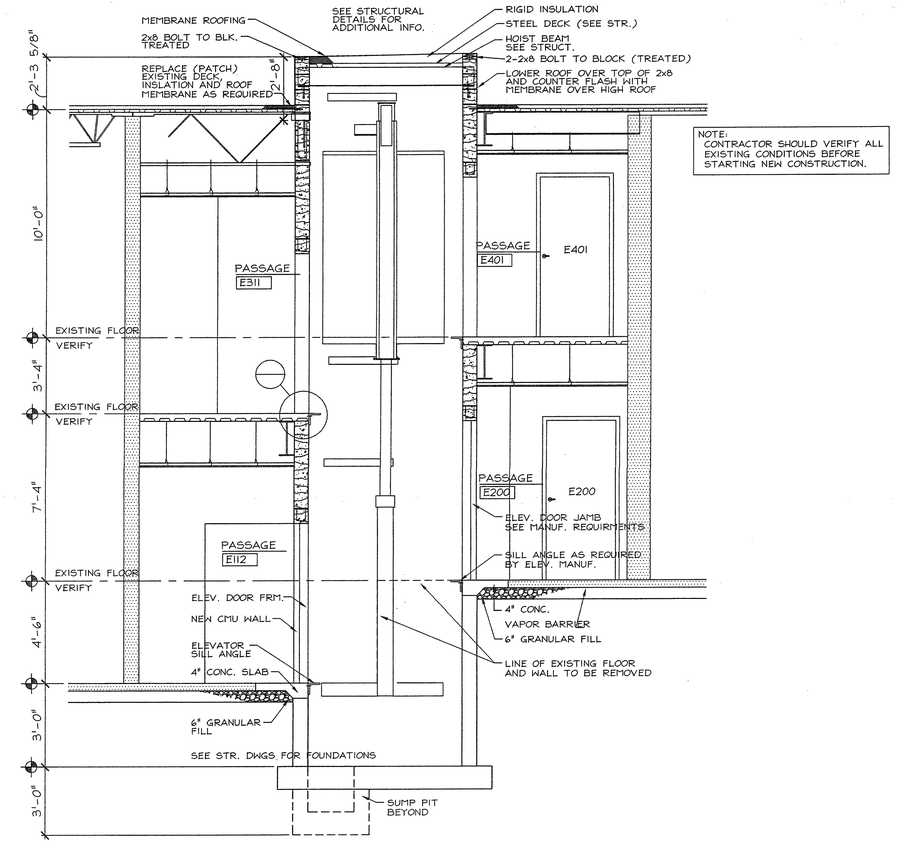

NOTE:
CONTRACTOR SHOULD VERIFY ALL EXISTING CONDITIONS BEFORE STARTING NEW CONSTRUCTION.

A5 SECTION THRU ELEVATOR
A3.04 3/8" = 1'-0"

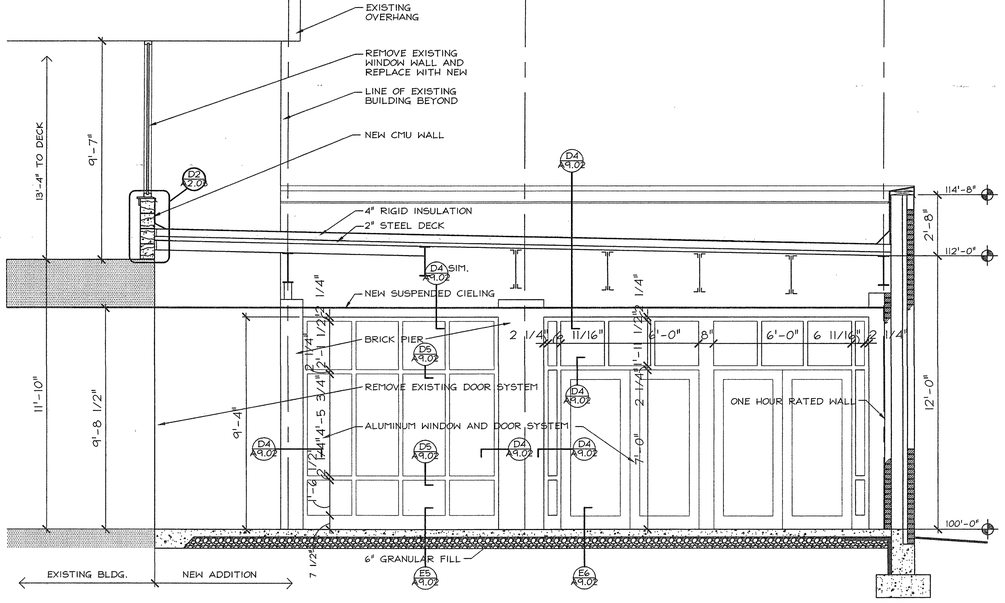

C1 SECTION THRU LOBBY
A3.04 3/8" = 1'-0"

Fletcher:: Architects, Inc.

ARCHITECTURE ■ PLANNING ■ INTERIORS
1906 NORTH SIGNAL HILLS DRIVE
KIRKWOOD, MO. 63122
TEL. (314) 965-6333
FAX (314) 965-8997
info@fletcher-architects.com

CONSULTANTS

CIVIL ENGINEER:
FRONTENAC ENGR. GROUP, INC.
18 BUNNEN DR.
ST. LOUIS, MO 63143
PHONE (314) 644-2200
FAX (314) 644-0645

STRUCT. ENGINEER:
ABS CONSULTING
1648 LACKLAND HILLS PARKWAY
ST. LOUIS, MO 63146
PHONE (314) 994-7007
FAX (314) 994-0722

M.E.P. ENGINEER:
SSC ENGINEERING
660 SPIRIT OF ST. LOUIS BLVD.
CHESTERFIELD, MO 63005
PHONE (636) 530-7770
FAX (636) 530-7677

HARDWARE CONSULTANT
ST10
6566 PIERRE CT.
ST. LOUIS, MO 63128
PHONE (314) 487-7778
FAX (314) 842-2642

KITCHEN CONSULTANTS
THE GEIGER GROUP
3501 WATSON ROAD
ST. LOUIS, MO 63139
PHONE (314) 645-2987
FAX (314) 645-3208

LANDSCAPE ARCHITECT
AUSTIN TAO AND ASSOC.
2701 LOCUST, 2ND. FLOOR
ST. LOUIS, MO 63103
PHONE (314) 436-3200
FAX (314) 436-9180

INTERIOR DESIGN
O'TOOLE DESIGN ASSOC.
124 WEST JEFFERSON
KIRKWOOD, MO 63122
PHONE (314) 909-1905
FAX (314) 909-1906

PROJECT:
ADDITION AND RENOVATIONS TO
McKnight Road Church of Christ
2515 SOUTH MCKNIGHT ROAD
ST. LOUIS, MO 63124

THE SEAL AND SIGNATURES APPLY ONLY TO THE DOCUMENT TO WHICH THEY ARE AFFIXED, AND WE EXPRESSLY DISCLAIM ANY RESPONSIBILITY FOR ALL OTHER PLANS, SPECIFICATIONS, ESTIMATES, REPORTS, OR OTHER DOCUMENTS OR INSTRUMENTS RELATED TO OR INTENDED TO BE USED FOR ANY PART OR PARTS OF THE PROJECT.

COPYRIGHT 2002 FLETCHER ARCHITECTS, INC.

NO.	DATE	REVISIONS
	00/00/01	ADDENDUM #0

PROJECT NO. 01403
DRAWN BY: SER
CHECKED BY: MEF
DATE: NOVEMBER 1, 2002

SHEET NO. A3.04

CONSTRUCTION/BID DRAWINGS

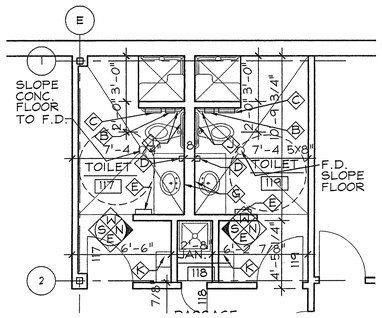

B1 A4.01 ENLARGED TOILET ROOM PLAN
1/4" = 1'-0"

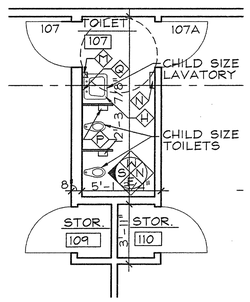

B3 A4.01 ENLARGED TOILET ROOM PLAN
1/4" = 1'-0"

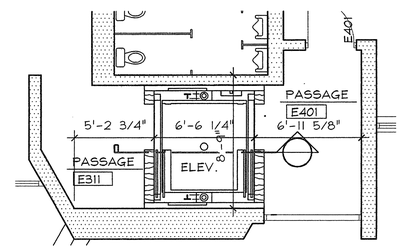

B5 A4.01 ENLARGED ELEVATOR PLAN
1/4" = 1'-0"

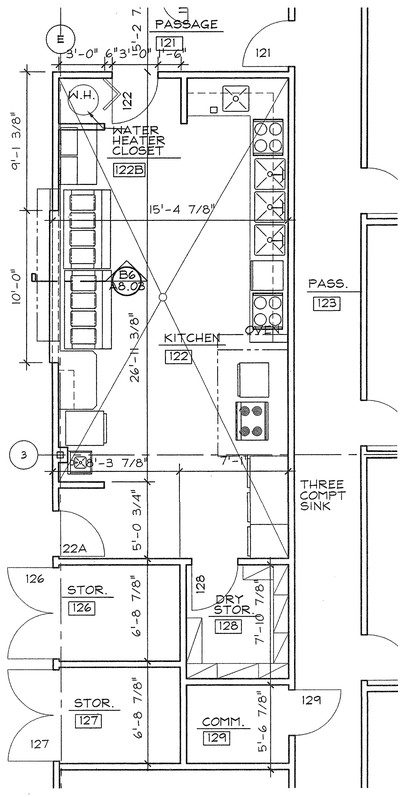

D1 A4.01 ENLARGED KITCHEN/ STOR. PLAN
1/4" = 1'-0"

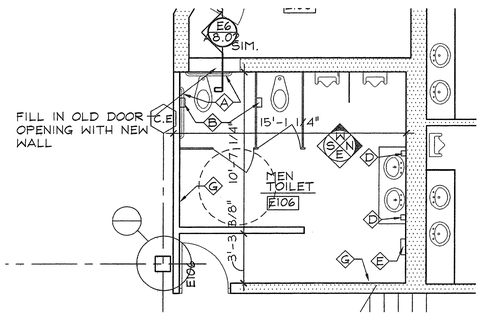

C3 A4.01 ENLARGED TOILET ROOM PLAN
1/4" = 1'-0"

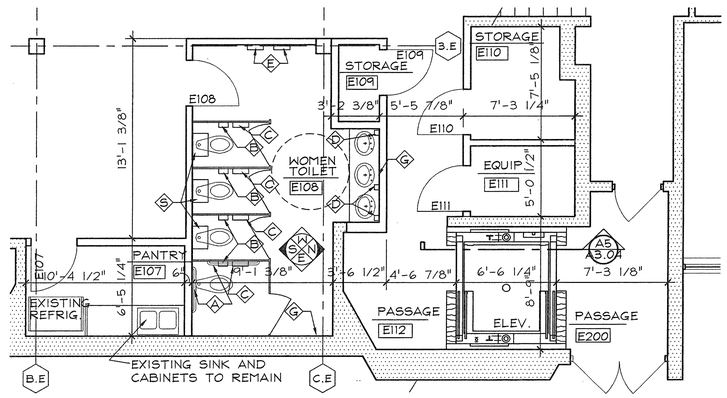

C5 A4.01 ENLARGED ELEVATOR AND TOILET ROOM PLAN
1/4" = 1'-0"

TOILET ACCESSORIES		
NO.	ITEM	REMARKS
A	36" GRAB BAR	CENTER @ 3'-0" AFF
B	TOILET PAPER DISPENCER	BTM. @ 1'-6" AFF
C	FEMININE NAPKIN DISPOSAL	BTM. @ 1'-4 1/2" AFF
D	SOAP DISPENCER	
E	TOWEL DISPENCER	
F	MIRROR 18" X 36"	BTM. @ 3'-4" AFF
G	MIRROR 36" X 36"	BTM. @ 3'-4" AFF
H	SINK	TOP @ 2'-0" AFF
J	28" GRAB BAR	CENTER @ 3'-0" AFF
K	1x3 LOCKERS	
L	28" GRAB BAR	CENTER @ 2'-0" AFF
M	SOAP DISPENCER	BTM. @ 2'-3" AFF
N	TOWEL DISPENCER	BTM. @ 2'-3" AFF
P	TOILET PAPER DISPENCER	BTM. @ 1'-0" AFF
Q	MIRROR 18" X 36"	BTM. @ 2'-3" AFF
R	MIRROR 60" X 36"	BTM. @ 2'-3" AFF
S	MIRROR 12"X 18"	TOP @ 3'-0" AFF

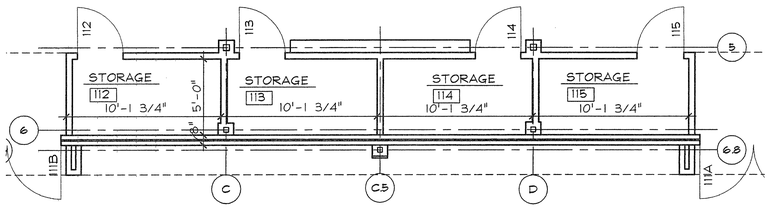

E3 A4.01 FELLOWSHIP HALL STORAGE PLAN
1/4" = 1'-0"

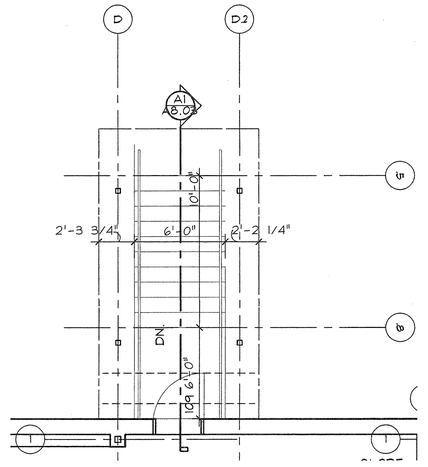

E5 A4.01 EXTERIOR STAIR PLAN
1/4" = 1'-0"

Fletcher:: Architects, Inc.
ARCHITECTURE ■ PLANNING ■ INTERIORS
1906 NORTH SIGNAL HILLS DRIVE
KIRKWOOD, MO. 63122
TEL. (314) 965-6333
FAX. (314) 965-8997
info@fletcher-architects.com

CONSULTANTS
CIVIL ENGINEER:
FRONTENAC ENGR. GROUP, INC.
16 SUNNEN DR.
ST. LOUIS, MO 63143
PHONE (314) 644-2200
FAX (314) 644-0845
STRUCT. ENGINEER:
ABS CONSULTING
1648 LACKLAND HILLS PARKWAY
ST. LOUIS, MO 63146
PHONE (314) 994-7007
FAX (314) 994-0722
M.E.P. ENGINEER:
SSC ENGINEERING
560 SPIRIT OF ST. LOUIS BLVD.
CHESTERFIELD, MO 63005
PHONE (636) 530-7770
FAX (636) 530-7877
HARDWARE CONSULTANT
5710
5566 PIERRE CT.
ST. LOUIS, MO 63128
PHONE (314) 487-7776
FAX (314) 842-2242
KITCHEN CONSULTANTS
THE GEIGER GROUP
3501 WATSON ROAD
ST. LOUIS, MO 63139
PHONE (314) 646-2987
FAX (314) 646-3208
LANDSCAPE ARCHITECT
AUSTIN TAO AND ASSOC.
2101 LOCUST, 2ND. FLOOR
ST. LOUIS, MO 63103
PHONE (314) 436-2999
FAX (314) 436-9150
INTERIOR DESIGN
O'TOOLE DESIGN ASSOC.
124 WEST JEFFERSON
KIRKWOOD, MO 63122
PHONE (314) 909-9005
FAX (314) 909-1906

PROJECT:
ADDITION AND RENOVATIONS TO
McKnight Road
Church of Christ
2515 SOUTH MCKNIGHT ROAD
ST. LOUIS, MO 63124

THE SEAL AND SIGNATURES APPLY ONLY TO THE DOCUMENTS TO WHICH THEY ARE AFFIXED. AND WE EXPRESSLY DISCLAIM ANY RESPONSIBILITY FOR ALL OTHER PLANS, SPECIFICATIONS, ESTIMATES, REPORTS, OR OTHER DOCUMENTS OR INSTRUMENTS RELATING TO OR INTENDED TO BE USED FOR ANY PART OR PARTS OF THE PROJECT.

COPYRIGHT 2002 FLETCHER ARCHITECTS, INC.

NO	DATE	REVISIONS
	00/00/01	ADDENDUM #0

PROJECT NO. 01403
SHEET NO. A4.01
DRAWN BY: SER
CHECKED BY: MEF
DATE: NOVEMBER 1, 2002

CONSTRUCTION/BID DRAWINGS

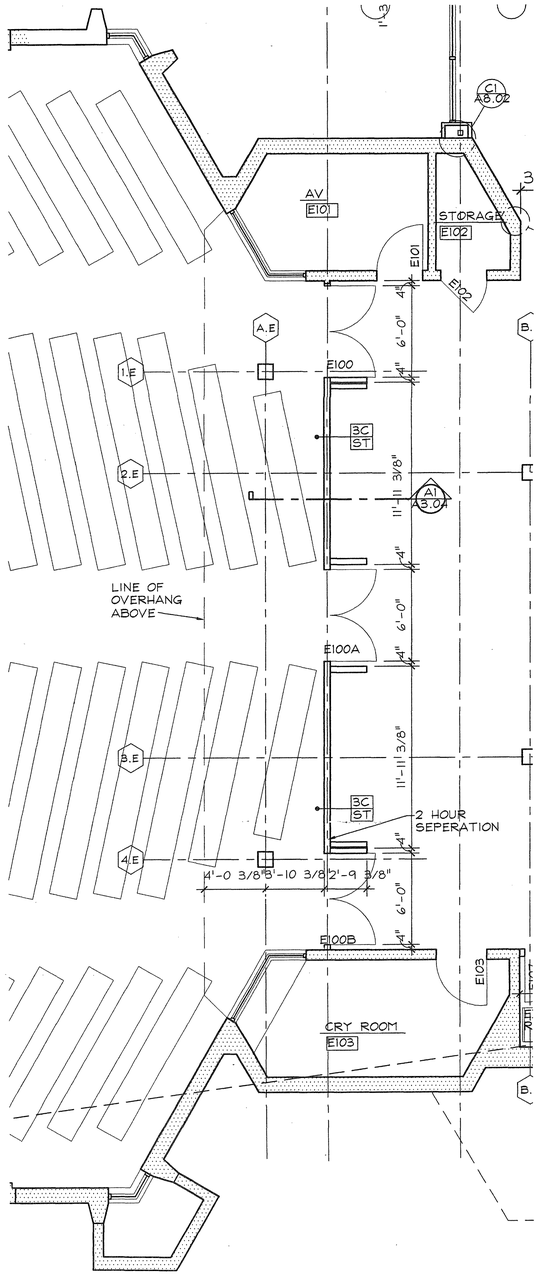

D1 A4.02 ENLARGED WALL AUDITORIUM PLAN
1/4" = 1'-0"

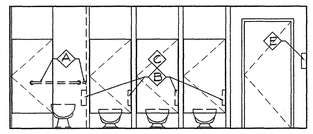

A3 A4.02 TOILET ELEVATION ROOM E108-SOUTH
1/4" = 1'-0"

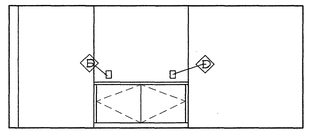

A4 A4.02 TOILET ELEVATION ROOM E108-NORTH
1/4" = 1'-0"

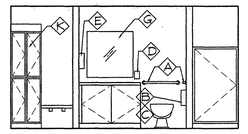

A5 A4.02 TOILET ELEVATION ROOM 119-SOUTH
1/4" = 1'-0"

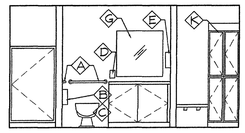

B3 A4.02 TOILET ELEVATION ROOM 117-NORTH
1/4" = 1'-0"

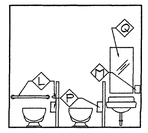

B4 A4.02 TOILET ELEVATION ROOM 107-SOUTH
1/4" = 1'-0"

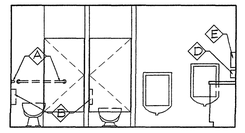

B5 A4.02 TOILET ELEVATION ROOM E106-WEST
1/4" = 1'-0"

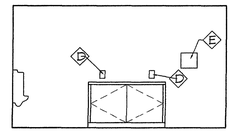

B6 A4.02 TOILET ELEVATION ROOM E106-NORTH
1/4" = 1'-0"

TOILET ACCESSORIES		
NO.	ITEM	REMARKS
A	36" GRAB BAR	CENTER @ 3'-0" AFF
B	TOILET PAPER DISPENCER	BTM. @ 1'-6" AFF
C	FEMININE NAPKIN DISPOSAL	BTM. @ 1'-4 1/2" AFF
D	SOAP DISPENCER	
E	TOWEL DISPENCER	
F	MIRROR 18" X 36"	BTM. @ 3'-4" AFF
G	MIRROR 36" X 36"	BTM. @ 3'-4" AFF
H	SINK	TOP @ 2'-0" AFF
J	28" GRAB BAR	CENTER @ 3'-0" AFF
K	1'x3' LOCKERS	
L	28" GRAB BAR	CENTER @ 2'-0" AFF
M	SOAP DISPENCER	BTM. @ 2'-3" AFF
N	TOWEL DISPENCER	BTM. @ 2'-3" AFF
P	TOILET PAPER DISPENCER	BTM. @ 1'-0" AFF
Q	MIRROR 18" X 36"	BTM. @ 2'-3" AFF
R	MIRROR 60" X 36"	BTM. @ 2'-3" AFF
S	MIRROR 12"X 18"	TOP @ 3'-0" AFF

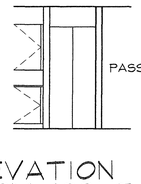

C4 A4.02 ELEVATION ROOM 122-EAST
1/4" = 1'-0"

Fletcher :: Architects, Inc.

ARCHITECTURE ■ PLANNING ■ INTERIORS
1906 NORTH SIGNAL HILLS DRIVE
KIRKWOOD, MO. 63122
TEL. (314) 965-6333
FAX. (314) 965-8997
info@fletcher-architects.com

CONSULTANTS

CIVIL ENGINEER:
FRONTENAC ENGR. GROUP, INC.
18 SUNNEN DR.
ST. LOUIS, MO 63143
PHONE (314) 644-2200
FAX (314) 644-0845

STRUCT. ENGINEER:
ABS CONSULTING
1648 LACKLAND HILLS PARKWAY
ST. LOUIS, MO 63146
PHONE (314) 994-7007
FAX (314) 994-0722

M.E.P. ENGINEER:
SSC ENGINEERING
560 SPIRIT OF ST. LOUIS BLVD.
CHESTERFIELD, MO 63005
PHONE (636) 530-7770
FAX (636) 530-7877

HARDWARE CONSULTANT
8710
5566 PIERRE CT.
ST. LOUIS, MO 63128
PHONE (314) 487-7776
FAX (314) 842-2242

KITCHEN CONSULTANTS
THE GEIGER GROUP
3501 WATSON ROAD
ST. LOUIS, MO 63139
PHONE (314) 645-2087
FAX (314) 645-3208

LANDSCAPE ARCHITECT
AUSTIN TAO. AND ASSOC.
2101 LOCUST, 2ND. FLOOR
ST. LOUIS, MO 63103
PHONE (314) 436-2999
FAX (314) 436-9120

INTERIOR DESIGN
OTOOLE DESIGN ASSOC.
104 WEST JEFFERSON
KIRKWOOD, MO 63122
PHONE (314) 909-1903
FAX (314) 909-1906

PROJECT:
ADDITION AND RENOVATIONS TO
McKnight Road Church of Christ
2515 SOUTH MCKNIGHT ROAD
ST. LOUIS, MO 63124

THE SEAL AND SIGNATURES APPLY ONLY TO THE DOCUMENT TO WHICH THEY ARE AFFIXED, AND WE EXPRESSLY DISCLAIM ANY RESPONSIBILITY FOR ALL OTHER PLANS, SPECIFICATIONS, ESTIMATES, REPORTS, OR OTHER DOCUMENTS OR INSTRUMENTS RELATING TO OR INTENDED TO BE USED FOR ANY PART OR PARTS OF THE PROJECT.

COPYRIGHT 2002 FLETCHER ARCHITECTS, INC.

NO	DATE	REVISIONS
	00/00/01	ADDENDUM #0

PROJECT NO. 01403
DRAWN BY: SER
CHECKED BY: MEF
DATE: NOVEMBER 1, 2002

SHEET NO. A4.02

CONSTRUCTION/BID DRAWINGS

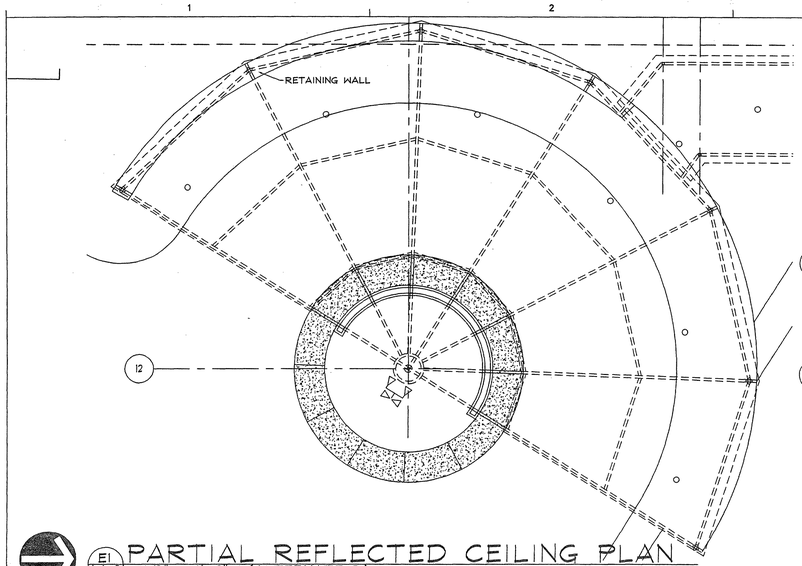

PARTIAL REFLECTED CEILING PLAN (ALTERNATE 3)

E1 / A6.01 1/8" = 1'-0"

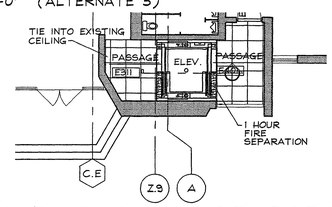

NORTH

SECOND FLOOR REFLECTED CEILING PLAN

E1 / A6.01 1/8" = 1'-0"

NORTH

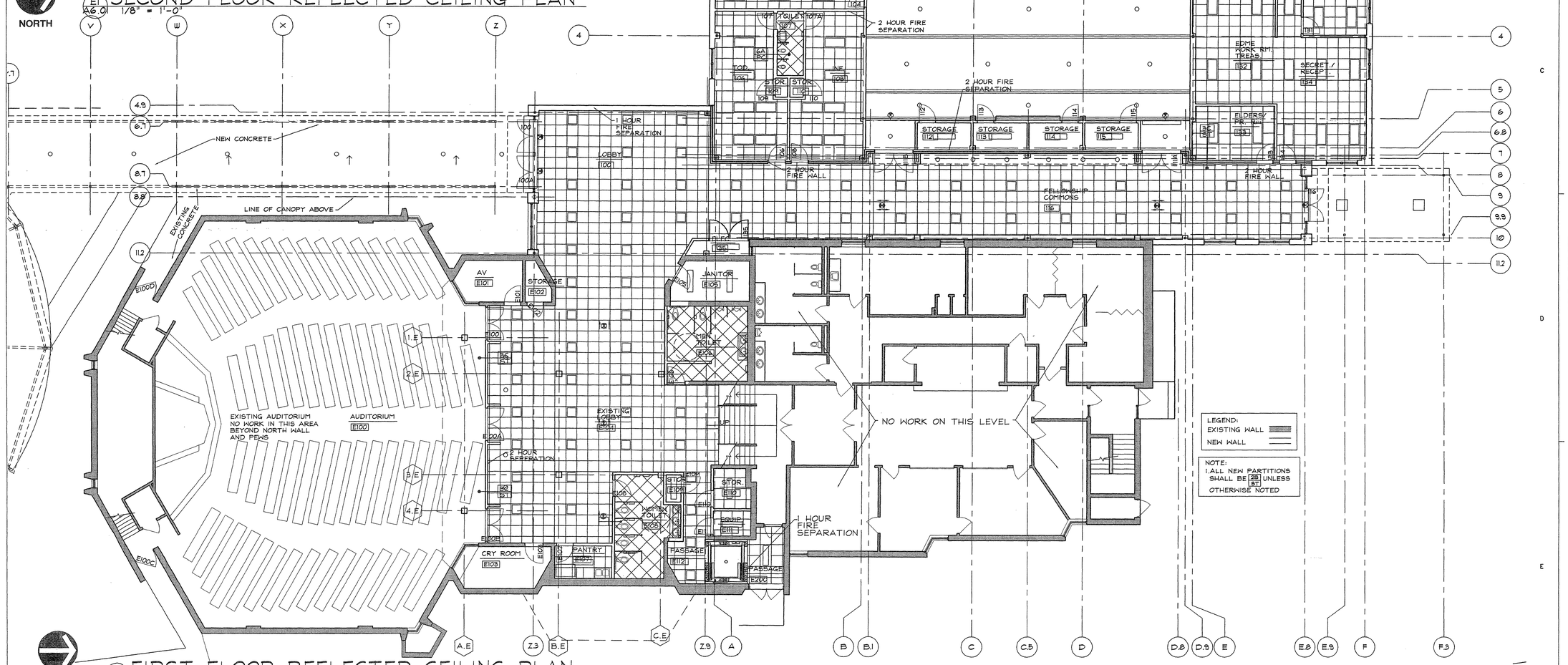

FIRST FLOOR REFLECTED CEILING PLAN

E1 / A6.01 1/8" = 1'-0"

NORTH

Fletcher:: Architects, Inc.

ARCHITECTURE ■ PLANNING ■ INTERIORS
1906 NORTH SIGNAL HILLS DRIVE
KIRKWOOD, MO. 63122
TEL. (314) 965-6333
FAX. (314) 965-8997
info@fletcher-architects.com

CONSULTANTS

CIVIL ENGINEER:
FRONTENAC ENGR. GROUP, INC.
18 SUNNEN DR.
ST. LOUIS, MO 63143
PHONE (314) 644-2200
FAX (314) 644-0545

STRUCT. ENGINEER:
ABS CONSULTING
1548 LACKLAND HILLS PARKWAY
ST. LOUIS, MO 63146
PHONE (314) 994-7007
FAX (314) 994-0722

M.E.P. ENGINEER:
SSC ENGINEERING
550 SPIRIT OF ST. LOUIS BLVD.
CHESTERFIELD, MO 63005
PHONE (636) 530-7770
FAX (636) 530-7877

HARDWARE CONSULTANT
STO
5555 PIERRE CT.
ST. LOUIS, MO 63128
PHONE (314) 487-7776
FAX (314) 842-2242

KITCHEN CONSULTANTS
THE GEIGER GROUP
3501 WATSON ROAD
ST. LOUIS, MO 63139
PHONE (314) 645-2967
FAX (314) 645-3308

LANDSCAPE ARCHITECT
AUSTIN TAO. AND ASSOC.
2101 LOCUST, 2ND. FLOOR
ST. LOUIS, MO 63103
PHONE (314) 436-3999
FAX (314) 436-5120

INTERIOR DESIGN
OTOOLE DESIGN ASSOC.
124 WEST JEFFERSON
KIRKWOOD, MO 63122
PHONE (314) 909-1006
FAX (314) 909-1006

PROJECT:
ADDITION AND RENOVATIONS TO
McKnight Road Church of Christ
2515 SOUTH MCKNIGHT ROAD
ST. LOUIS, MO 63124

THE SEAL AND SIGNATURES APPLY ONLY TO THE DOCUMENT AS ORIGINALLY ISSUED AND SEALED, AND WE EXPRESSLY DISCLAIM ANY RESPONSIBILITY FOR ALL OTHER PLANS, SPECIFICATIONS, ESTIMATES, REPORTS, OR OTHER DOCUMENTS OR INSTRUMENTS RELATING TO OR INTENDED TO BE USED FOR ANY PART OR PARTS OF THE PROJECT.

COPYRIGHT 2002 FLETCHER ARCHITECTS, INC.

NO	DATE	REVISIONS
	00/00/01	ADDENDUM #0

PROJECT NO. 01403
DRAWN BY: SER
CHECKED BY: MEF
DATE: NOVEMBER 1, 2002

SHEET NO. **A6.01**

CONSTRUCTION/BID DRAWINGS

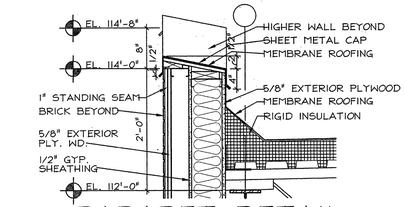

PARAPET DETAIL OVER WINDOWS

A1 / A8.01 — 1" = 1'-0"

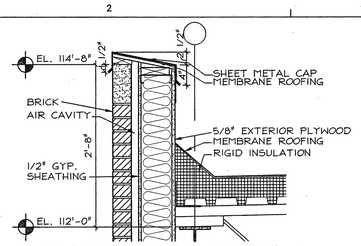

PARAPET DETAIL AT BRICK WALL

A2 / A8.01 — 1" = 1'-0"

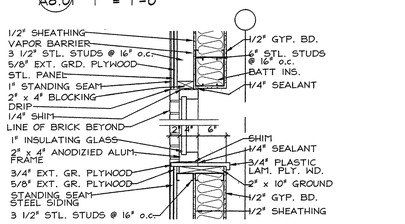

TYP. HEAD & SILL DETAIL

B1 / A8.01 — 1" = 1'-0"

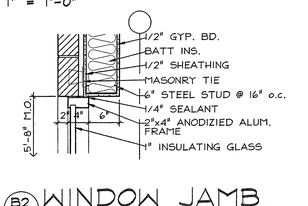

WINDOW JAMB

B2 / A8.01 — 1" = 1'-0"

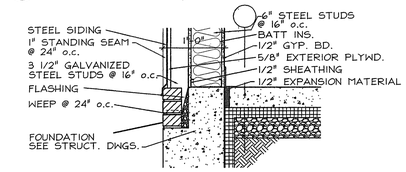

STEEL SIDING AT GRADE

C1 / A8.01 — 1" = 1'-0"

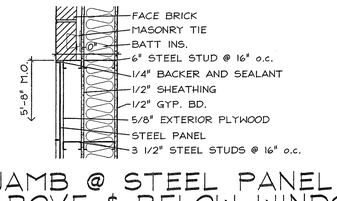

JAMB @ STEEL PANEL ABOVE & BELOW WINDOW

B2 / A8.01 — 1" = 1'-0"

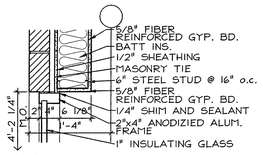

JAMB @ CLERESTORY WINDOW

C2 / A8.01 — 1" = 1'-0"

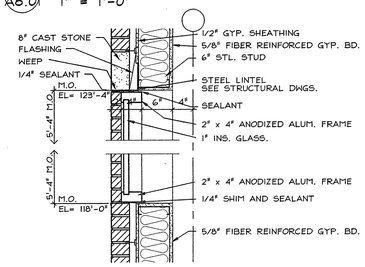

HEAD AND SILL @ CLERESTORY WINDOW

D2 / A8.01 — 1" = 1'-0"

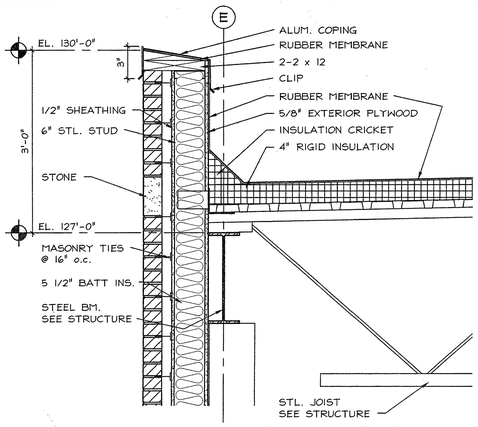

SECTION THRU NORTH WALL @ FELLOWSHIP HALL

A4 / A8.01 — 1" = 1'-0"

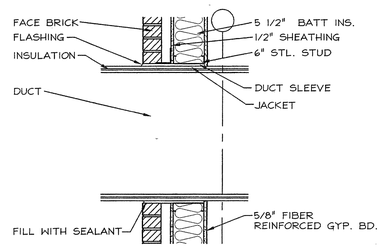

SECTION THRU MECH. DUCT

A4 / A8.01 — 1" = 1'-0"

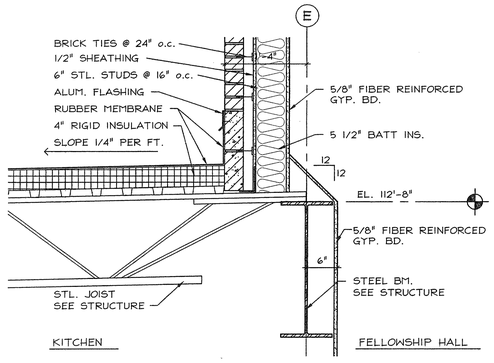

SECTION THRU NORTH WALL @ FELLOWSHIP HALL

B4 / A8.01 — 1" = 1'-0"

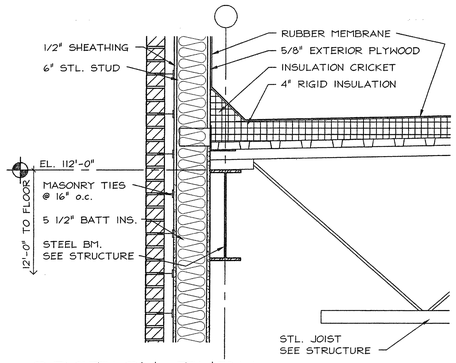

SECTION THRU NORTH WALL @ COL. F

B5 / A8.01 — 1" = 1'-0"

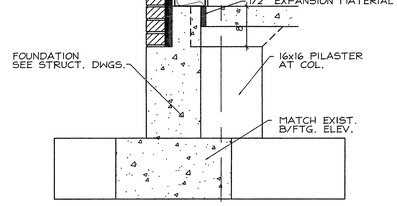

SECTION @ COL. 10

D4 / A8.01 — 1" = 1'-0"

Fletcher:: Architects, Inc.

ARCHITECTURE ■ PLANNING ■ INTERIORS
1906 NORTH SIGNAL HILLS DRIVE
KIRKWOOD, MO. 63122
TEL. (314) 965-6333
FAX. (314) 965-8997
info@fletcher-architects.com

CONSULTANTS

CIVIL ENGINEER:
FRONTENAC ENGR. GROUP, INC.
18 SUNNEN DR.
ST. LOUIS, MO 63143
PHONE (314) 644-2200
FAX (314) 644-0646

STRUCT. ENGINEER:
ASG CONSULTING
1548 LACKLAND HILLS PARKWAY
ST. LOUIS, MO 63146
PHONE (314) 994-7007
FAX (314) 994-0722

M.E.P. ENGINEER:
SSC ENGINEERING
550 SPIRIT OF ST. LOUIS BLVD.
CHESTERFIELD, MO 63005
PHONE (636) 530-7770
FAX (636) 530-7877

HARDWARE CONSULTANT
8710
5565 PIERRE CT.
ST. LOUIS, MO 63126
PHONE (314) 487-7776
FAX (314) 842-2242

KITCHEN CONSULTANTS
THE GEIGER GROUP
8901 WATSON ROAD
ST. LOUIS, MO 63119
PHONE (314) 646-2087
FAX (314) 645-3208

LANDSCAPE ARCHITECT
AUSTIN TAO, AND ASSOC.
2101 LOCUST, 2ND. FLOOR
ST. LOUIS, MO 63103
PHONE (314) 436-3999
FAX (314) 436-0150

INTERIOR DESIGN
OTOOLE DESIGN ASSOC.
104 WEST JEFFERSON
KIRKWOOD, MO 63122
PHONE (314) 909-1906
FAX (314) 909-1908

PROJECT:
ADDITION AND RENOVATIONS TO
McKnight Road Church of Christ
2515 SOUTH MCKNIGHT ROAD
ST. LOUIS, MO 63124

THE SEAL AND SIGNATURES APPLY ONLY TO THE DOCUMENT TO WHICH THEY ARE AFFIXED, AND WE EXPRESSLY DISCLAIM ANY RESPONSIBILITY FOR ALL REPRODUCTIONS OF SUCH DOCUMENTS WHETHER BY US OR OTHER. DOCUMENTS OR INSTRUMENTS RELATING TO OR INTENDED TO BE USED FOR ANY PART OR PARTS OF THE PROJECT.

COPYRIGHT 2002 FLETCHER ARCHITECTS, INC.

NO.	DATE	REVISIONS
	00/00/01	ADDENDUM #0

PROJECT NO. 01-103
DRAWN BY: SER
CHECKED BY: MEF
DATE: NOVEMBER 1, 2002

SHEET NO. A8.01

CONSTRUCTION/BID DRAWINGS

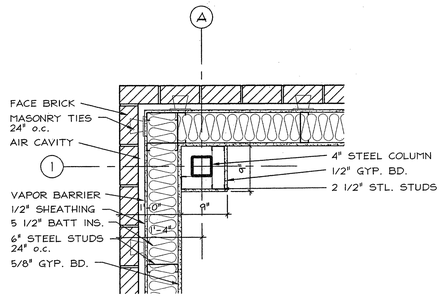

A3 DETAIL
A8.02 1" = 1'-0"

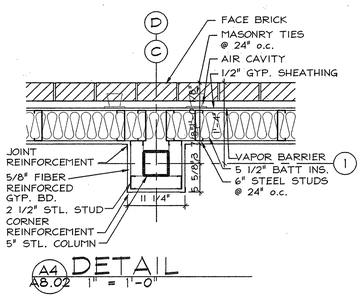

A4 DETAIL
A8.02 1" = 1'-0"

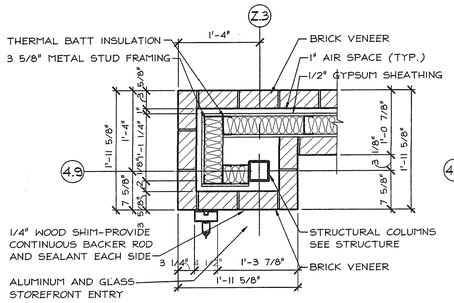

B1 DETAIL
A8.02 1" = 1'-0"

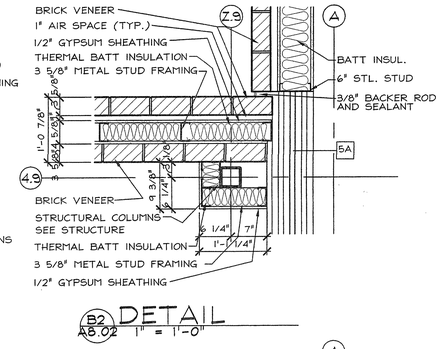

B2 DETAIL
A8.02 1" = 1'-0"

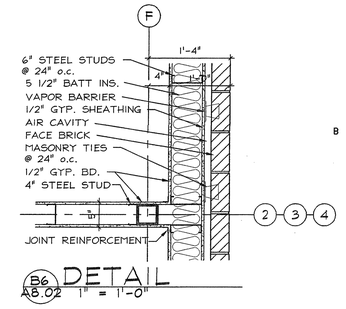

B6 DETAIL
A8.02 1" = 1'-0"

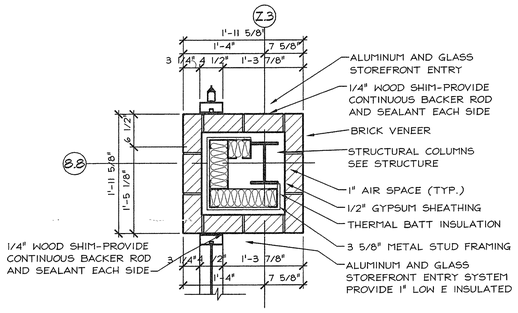

C1 DETAIL
A8.02 1" = 1'-0"

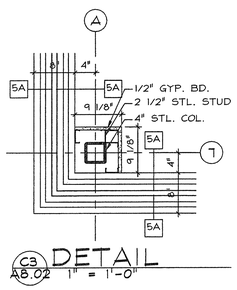

C3 DETAIL
A8.02 1" = 1'-0"

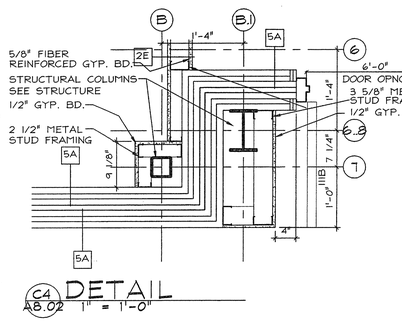

C4 DETAIL
A8.02 1" = 1'-0"

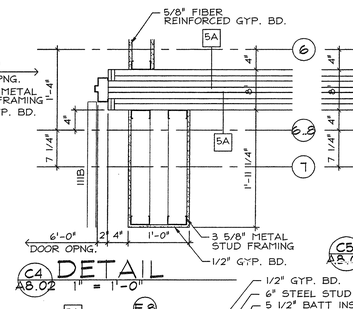

C4 DETAIL
A8.02 1" = 1'-0"

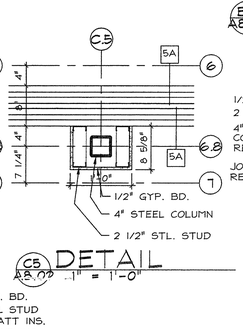

C5 DETAIL
A8.02 1" = 1'-0"

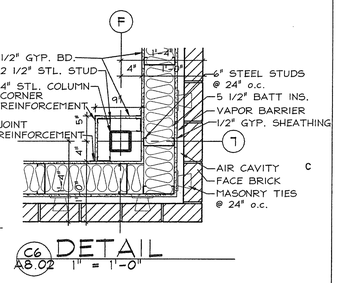

C6 DETAIL
A8.02 1" = 1'-0"

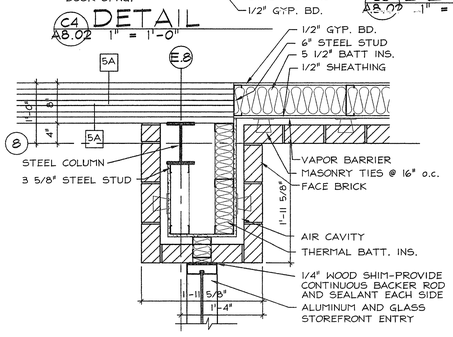

D4 DETAIL
A8.02 1" = 1'-0"

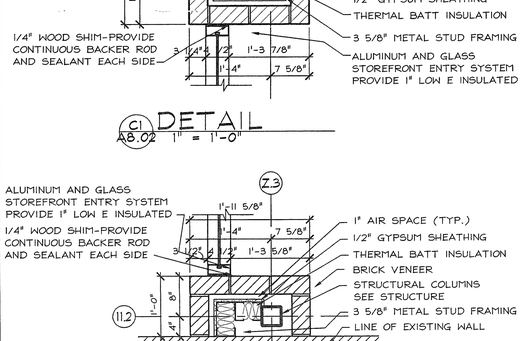

D1 DETAIL
A8.02 1" = 1'-0"

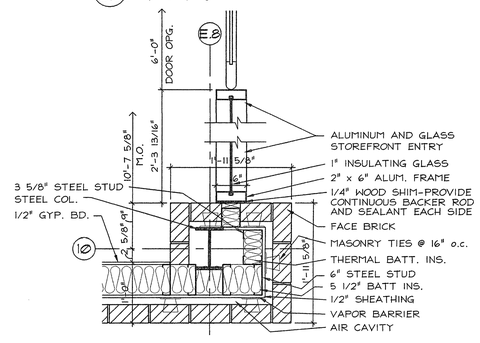

E4 DETAIL
A8.02 1" = 1'-0"

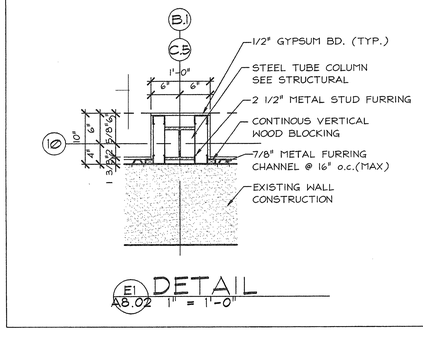

E1 DETAIL
A8.02 1" = 1'-0"

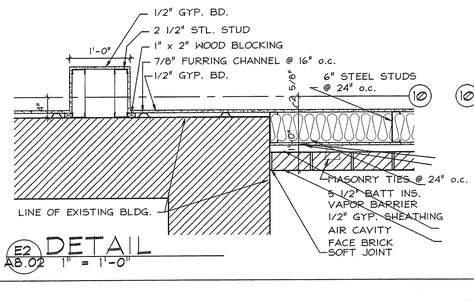

E2 DETAIL
A8.02 1" = 1'-0"

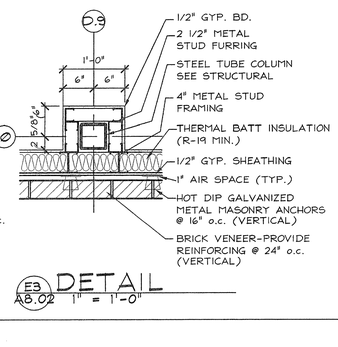

E3 DETAIL
A8.02 1" = 1'-0"

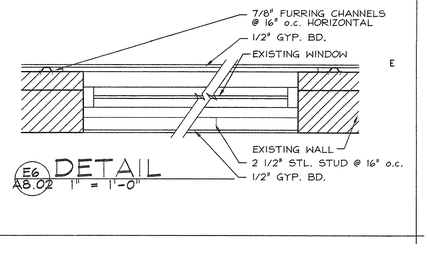

E6 DETAIL
A8.02 1" = 1'-0"

Fletcher:: Architects, Inc.

ARCHITECTURE ■ PLANNING ■ INTERIORS
1906 NORTH SIGNAL HILLS DRIVE
KIRKWOOD, MO. 63122
TEL. (314) 965-6333
FAX. (314) 965-8997
info@fletcher-architects.com

CONSULTANTS

CIVIL ENGINEER:
FRONTENAC ENGR. GROUP, INC.
19 SUNNEN DR.
ST. LOUIS, MO 63143
PHONE (314) 644-2200
FAX (314) 644-0646

STRUCT. ENGINEER:
ABB CONSULTING
1548 LACKLAND HILLS PARKWAY
ST. LOUIS, MO 63146
PHONE (314) 994-7007
FAX (314) 994-0732

M.E.P. ENGINEER:
SSC ENGINEERING
550 SPIRIT OF ST. LOUIS BLVD.
CHESTERFIELD, MO 63005
PHONE (636) 530-7770
FAX (636) 530-7877

HARDWARE CONSULTANT
STO
5565 PIERRE CT.
ST. LOUIS, MO 63128
PHONE (314) 487-7778
FAX (314) 842-2242

KITCHEN CONSULTANTS
THE GEISER GROUP
3501 WATSON ROAD
ST. LOUIS, MO 63139
PHONE (314) 645-2087
FAX (314) 645-5208

LANDSCAPE ARCHITECT
AUSTIN TAO AND ASSOC.
2101 LOCUST, 2ND. FLOOR
ST. LOUIS, MO 63103
PHONE (314) 436-3299
FAX (314) 436-0130

INTERIOR DESIGN
OTOOLE DESIGN ASSOC.
124 WEST JEFFERSON
KIRKWOOD, MO 63122
PHONE (314) 909-1905
FAX (314) 909-1906

PROJECT:
ADDITION AND RENOVATIONS TO
McKnight Road
Church of Christ
2515 SOUTH MCKNIGHT ROAD
ST. LOUIS, MO 63124

THE SEAL AND SIGNATURES APPLY ONLY TO THE DOCUMENT TO WHICH THEY ARE AFFIXED, AND WE EXPRESSLY DISCLAIM ANY RESPONSIBILITY FOR ALL OTHER PLANS, SPECIFICATIONS, ESTIMATES, REPORTS, OR OTHER DOCUMENTS OR INSTRUMENTS RELATING TO OR INTENDED TO BE USED FOR ANY PART OR PARTS OF THE PROJECT.

COPYRIGHT 2002 FLETCHER ARCHITECTS, INC.

NO	DATE	REVISIONS
	05/00/01	ADDENDUM #0

PROJECT NO. 01403
DRAWN BY: SER
CHECKED BY: MEF
DATE: NOVEMBER 1, 2002

SHEET NO. A8.02

CONSTRUCTION/BID DRAWINGS

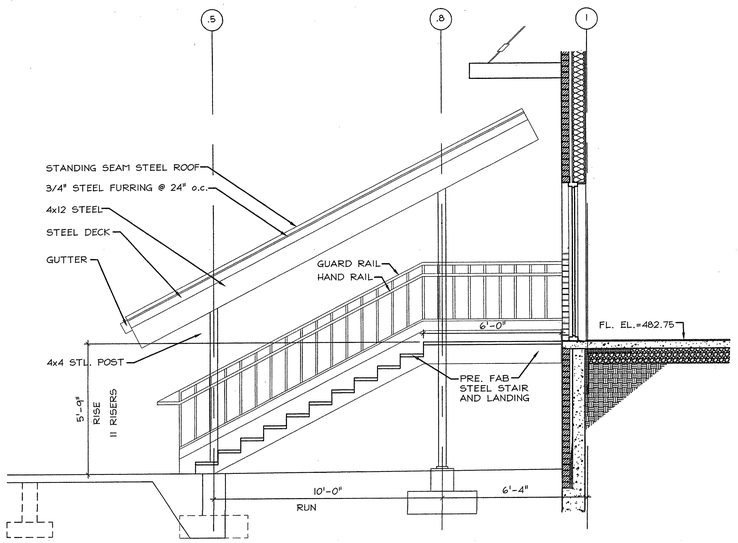

SECTION THRU STAIRS ON WEST SIDE

A1 / A8.03 — 3/8" = 1'-0"

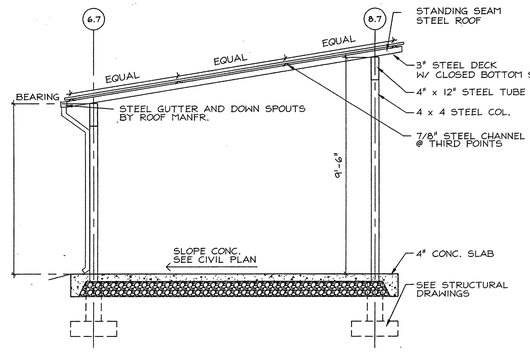

CANOPY SECTION

A5 / A8.03 — 3/8" = 1'-0"

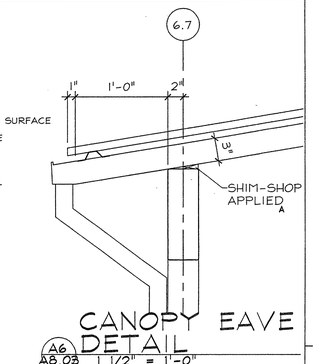

CANOPY EAVE DETAIL

A6 / A8.03 — 1 1/2" = 1'-0"

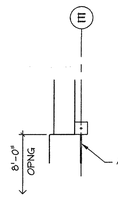

ROLLING GRILLE JAMB

B5 / A8.03 — 1" = 1'-0"

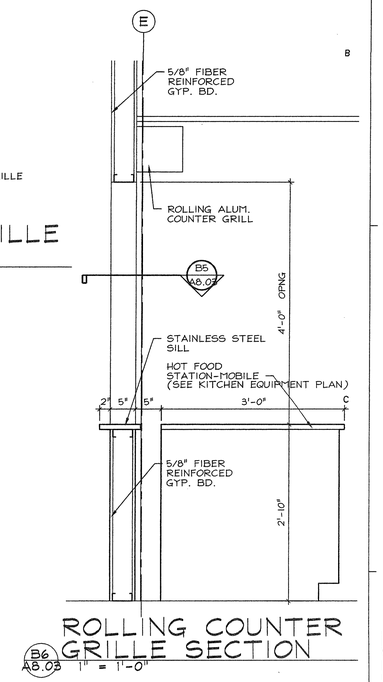

ROLLING COUNTER GRILLE SECTION

B6 / A8.03 — 1" = 1'-0"

Fletcher:: Architects, Inc.

ARCHITECTURE ■ PLANNING ■ INTERIORS
1906 NORTH SIGNAL HILLS DRIVE
KIRKWOOD, MO. 63122
TEL. (314) 965-6333
FAX. (314) 965-8997
info@fletcher-architects.com

CONSULTANTS

CIVIL ENGINEER:
FRONTENAC ENGR. GROUP, INC.
10 SUNNEN DR.
ST. LOUIS, MO 63143
PHONE (314) 644-2200
FAX (314) 644-0845

STRUCT. ENGINEER:
ABS CONSULTING
1648 LACKLAND HILLS PARKWAY
ST. LOUIS, MO 63146
PHONE (314) 994-7007
FAX (314) 994-0722

M.E.P. ENGINEER:
BSC ENGINEERING
550 SPIRIT OF ST. LOUIS BLVD.
CHESTERFIELD, MO 63005
PHONE (636) 530-7770
FAX (636) 530-7877

HARDWARE CONSULTANT
STIO
8566 PIERRE CT.
ST. LOUIS, MO 63126
PHONE (314) 487-7776
FAX (314) 842-2342

KITCHEN CONSULTANTS
THE GIEGER GROUP
3501 WATSON ROAD
ST. LOUIS, MO 63139
PHONE (314) 645-2687
FAX (314) 645-5308

LANDSCAPE ARCHITECT
AUSTIN TAO, AND ASSOC.
2101 LOCUST, 2ND. FLOOR
ST. LOUIS, MO 63103
PHONE (314) 436-3999
FAX (314) 436-0120

INTERIOR DESIGN
OTOOLE DESIGN ASSOC.
124 WEST JEFFERSON
KIRKWOOD, MO 63122
PHONE (314) 909-1906
FAX (314) 909-1908

PROJECT:
ADDITION AND RENOVATIONS TO
McKnight Road
Church of Christ
2515 SOUTH MCKNIGHT ROAD
ST. LOUIS, MO 63124

THE SEAL AND SIGNATURES APPLY ONLY TO THE DOCUMENT TO WHICH THEY ARE AFFIXED, AND WE EXPRESSLY DISCLAIM RESPONSIBILITY FOR ALL UNSEALED AND UNSIGNED COPIES OF THIS DOCUMENT OR OTHER DOCUMENTS OR INSTRUMENTS RELATING TO OR INTENDED TO BE USED FOR ANY PART OR PARTS OF THE PROJECT.

COPYRIGHT 2002 FLETCHER ARCHITECTS, INC.

NO	DATE	REVISIONS
	00/00/01	ADDENDUM #0

PROJECT NO. 01403
DRAWN BY: SER
CHECKED BY: MEF
DATE: NOVEMBER 1, 2002

SHEET NO. A8.03

CONSTRUCTION/BID DRAWINGS

Revised: 5/2/02
Revised: 10/24/02

ROOM FINISH SCHEDULE

RM. NO.	ROOM NAME	FLR.	BASE	WALLS N	WALLS E	WALLS S	WALLS W	CLG.	CLG. HT.	REMARKS
100	LOBBY	CP-1,3,4	VB-1	P-2	P-2	GL	BR	ACT-1	--	1, 3, 8
101	YOUTH ACTIVITY CENTER	CP-2	VB-1	P-1	P-1	P-2	P-1	OPEN	--	9
101A	STORAGE	CP-2	VB-1	P-1	P-1	P-1	P-1	OPEN	--	--
102	CLASSROOM	CP-2	VB-1	P-1	P-1	P-2	P-1	ACT-1	--	--
103	STORAGE	CP-2	VB-1	P-1	P-1	P-1	P-1	ACT-1	--	--
104	CLASS ROOM	CP-2	VB-1	P-1	P-1	P-2	P-1	ACT-1	--	--
105	STORAGE	CP-2	VB-1	P-1	P-1	P-1	P-1	ACT-1	--	--
105A	STORAGE	CP-2	VB-1	P-1	P-1	P-1	P-1	ACT-1	--	--
106	TODDLER	VT-1/CP-2	VB-1	P-1	P-1	P-1	P-1	ACT-1	--	3
107	TOILET	CT-1	CT-1	P-2	P-2	P-2	P-2	ACT-1	--	--
108	INFANT	VT-1/CP-2	VB-1	P-1	P-1	P-1	P-1	ACT-1	--	3
109	STORAGE	CP-2	VB-1	P-1	P-1	P-1	P-1	ACT-1	--	--
110	STORAGE	CP-2	VB-1	P-1	P-1	P-1	P-1	ACT-1	--	--
111	FELLOWSHIP HALL	VT-1,2	VB-1	P-2	P-2	P-2	P-2	OPEN	--	9, 11
112	STORAGE	VT-1	VB-1	P-1	P-1	P-1	P-1	DW	--	--
113	STORAGE	VT-1	VB-1	P-1	P-1	P-1	P-1	DW	--	--
114	STORAGE	VT-1	VB-1	P-1	P-1	P-1	P-1	DW	--	--
115	STORAGE	VT-1	VB-1	P-1	P-1	P-1	P-1	DW	--	--
116	FELLOWSHIP COMMONS	CP-1,3,4	VB-1	P-2	P-2,3	--	P-2,3	ACT-1	--	1, 2, 3, 4, 8
117	TOILET	CT-1	CT-1	P-5/MR	P-5	P-5	P-5	DW/ACT-1	--	2, 5, 6
118	JANITOR	SC	VB-1	P-5	P-5	P-5	P-5	DW	--	--
119	TOILET	CT-1	CT-1	P-5	P-5	P-5/MR	P-5	DW/ACT-1	--	2, 5, 6
120	LIBRARY/CONF.	CP-2	VB-1	P-2	P-2	P-2	P-2	ACT-1	--	--
121	PASSAGE	VT-1	VB-1	P-2	P-2	P-2	P-2	ACT-1	--	--
122	KITCHEN	QT-1	QT-1	P-1	P-1	P-1	P-1	ACT-1	--	--
122B	WATER HEATER CLOSET	SC	VB-1	P-1	P-1	P-1	P-1	ACT-1	--	--
123	PASSAGE	CP-2	VB-1	P-1	P-1	P-1	P-1	ACT-1	--	--
124	OFFICE	CP-2	VB-1	P-2	P-1	P-1	P-1	ACT-1	--	--
125	OFFICE	CP-2	VB-1	P-2	P-1	P-1	P-1	ACT-1	--	--
126	STORAGE	VT-1	VB-1	P-1	P-1	P-1	P-1	DW	--	--
127	STORAGE	VT-1	VB-1	P-1	P-1	P-1	P-1	DW	--	--
128	DRY STORAGE	VT-1	VB-1	P-1	P-1	P-1	P-1	ACT-1	--	--
129	COMM.	CP-2	VB-1	P-1	P-1	P-1	P-1	DW	--	--
130	OFFICE	CP-2	VB-1	P-2	P-1	P-1	P-1	ACT-1	--	--
131	OFFICE	CP-2	VB-1	P-2	P-1	P-1	P-1	ACT-1	--	--
132	EDME WORK RM. TREAS	CP-2	VB-1	P-1	P-3	P-2	P-1	ACT-1	--	--
133	ELDERS/PR RM	CP-2	VB-1	P-2	P-2	P-2	P-2	ACT-1	--	--
134	SECT./RECEPT	CP-2	VB-1	P-1	P-1	P-3	P-1	ACT-1	--	--
E100	AUDITORIUM	--	--	--	--	--	--	--	--	--
E101	AV	--	--	--	--	--	--	--	--	--
E102	STORAGE	--	--	--	--	--	--	--	--	--
E103	CRY ROOM	--	--	--	--	--	--	--	--	--
E104	EXISTING LOBBY	CP-1,3	VB-1	P-2	P-2	P-2	P-2	ACT-1	--	3
E105	JANITOR	SC	VB-1	P-1	P-1	P-1	P-1	DW	--	--
E106	MEN'S TOILET	CT-1	CT-1	P-2/MR	P-2	P-2	CT-1	ACT-2	--	2, 5, 6, 7, 10
E107	PANTRY	CT-1	CT-1	P-1	P-1	P-1	P-1	ACT-1	--	2
E108	WOMEN TOILET	CT-1	CT-1	P-2/MR	P-2	CT-1	P-1	ACT-2	--	2, 5, 6, 7, 10
E109	STORAGE	SC	VB-1	P-1	P-1	P-1	P-1	DW	--	--
E110	STORAGE	SC	VB-1	P-1	P-1	P-1	P-1	ACT-1	--	--
E111	EQUIPMENT	SC	VB-1	P-1	P-1	P-1	P-1	ACT-1	--	--
E112	PASSAGE	VT-1	VB-1	P-1	P-1	P-1	P-1	ACT-1	--	--

NO. RM.	ROOM NAME	FLR.	BASE	WALLS N	WALLS E	WALLS S	WALLS W	CLG.	CLG. HT.	REMARKS

NOTES:

1. PROVIDE SCHLEUTER TRANSTION STRIP (TR-1) BETWEEN MAIN CARPET AND WALK OF CARPET
2. CERAMIC TILE BASE TO BE STANDARD 12"X 12" TILE CUT IN HALF AND CAPPED OFF WITH STAINLESS SCHLEUTER TRIM (TR-1)
3. SEE FLOORPLAN FOR CARPET INSET DETAILS AND DIMENSIONS
4. P-3 TO BE LOCATED IN RECESSED NICHES ONLY. COLUMNS AND WALLS ADJACENT TO BE P-2.
5. VANITY TO BE CULTURED MARBLE WITH UNDERMOUNT PORCELAIN BOWLS.
6. MIRROR TO EXTEND FULL WIDTH OF VANITY AND 48" HIGH - FRAMELESS.
7. TILE ON WET WALL TO BE INSTALLED ON 45 DEGREE ANGLE - FLOOR TO CEILING. FLOOR TILE TO BE INSTALLED ON 45 DEGREE ANGLE.
8. CP-4 TO BE INSTALLED AT ENTRANCE ONLY. SEE PLAN FOR LOCATION.
9. CEILING TO BE PAINTED DF-1
10. CEILING TILE TO BE INSTALLED ON 45 DEGREE ANGLE TO MATCH FLOOR
11. VT-1 TO BE USED AS BORDER AND LINES OF BASKETBALL COURT

FINISH LEGEND

MCKNIGHT CHURCH
FINISH LEGEND
4/5/02
Revised: 10/24/02

CARPETING

CP-1 Lobby
MFG: Monterey
PATTERN: Spoolcraft
COLOR: Ohio Star
NO: 7506-296
OZ: 42 oz
FIBER: DuPont Antron Legacy
REP: Lynn Ludwig 314-644-4551

CP-2 General
MFG: Monterey
PATTERN: Park Avenue
COLOR: Le Clique
NO: 6028-3296
OZ: 34 oz
FIBER: DuPont Antron Legacy
REP: Lynn Ludwig 314-644-4551

CP-3 Border
MFG: Monterey
PATTERN: Alpaca
COLOR: Battleship
NO: 1050-939
OZ: 40 oz
SIZE: DuPont Antron Legacy
BACKING: Lynn Ludwig
REP: 314-644-4551

CP-4 Walk-Off
MFG: Lees
PATTERN: First Step Stepping Stone
COLOR: 524
NO:
OZ: 38 oz.
WIDTH: 6'
BACKING: Integrated cushion thermabond
REP: Kevin O'Brien 1-800-523-5647

CERAMIC TILE

CT-1
MFG: Crossville
PATTERN: Siena Series
COLOR: Villa Stone
NO: VS20
SIZE: 12 x 12
NOTE: For base, cut tile to 4" x 12" and top with Schleuter trim (TR-1)
NOTE: Floor and wall tile to be installed on a 45 degree angle

VINYL TILE

VT-1
MFG: Mannington
PATTERN: Brushwork
COLOR: Florentine
NO: 713
SIZE: 12 x 12

VT-2
MFG: Mannington
PATTERN: Brushwork
COLOR: Gesso White
NO: 711
SIZE: 12 x 12

VINYL BASE

VB-1
MFG: Johnsonite
COLOR: Burnt Umber
NO.: 63
SIZE: 4"
PROFILE: Cove

QUARRY TILE

QT-1
MFG: American Olean
PATTERN: Quarry Naturals
COLOR: Shadow Gray
NO: N46
SIZE: 8 x 8
FINISH: Abrasive Grit Option
NOTE: Provide sample of tile with and without abrasive grit prior to ordering

GROUT

GR-1 For CT-1 and QT-1
MFG: TEC
COLOR: Light Pewter
NO: 927
SIZE: 1/8 - 1/4"

TRANSITION STRIPS

TR-1
MFG: Schleuter
SERIES: Schiene-AE
SIZE: AE100 - 3/8"
FINISH: Satin anodized aluminum
NOTE: Use as transition between carpet and tile as well as cap for tile base

WOOD DOORS & TRIM

WD-1
SPECIES: Red Oak
FINISH: Match to existing
STAIN: -

PAINT

P-1 General
MFG: Sherwin Williams
QUALITY: Eggshell
NO: SW1102
COLOR: Chenille White

P-2 Accent
MFG: ICI
QUALITY: Eggshell
NO: 694
COLOR: Dry Goods

P-3 Accent
MFG: ICI
QUALITY: Eggshell
NO: 579
COLOR: Burrwood

P-4 Ceiling
MFG: Sherwin Williams
QUALITY: Eggshell
NO: SW1102
COLOR: Chenille White

P-5 Epoxy
MFG: ICI
QUALITY: Epoxy
NO: 694
COLOR: Dry Goods

DOOR FRAMES

DF-1
MFG: Sherwin Williams
QUALITY: Latex Enamel
NO: 1014
COLOR: Hematite

MULTI-COLOR PAINT
DELETED

WALLCOVERING
DELETED

FABRIC WRAPPED PANELS
DELETED

ACOUSTICAL TILE

ACT-1
MFG: Armstrong
PATTERN: Cortega
NO: 770
EDGE: Square Lay-in
SIZE: 24 x 24 x 5/8
COLOR: White
GRID: 15/16

ACT-2
MFG: Armstrong
PATTERN: Cortega
NO: 704
EDGE: Angled Tegular
SIZE: 24 x 24 x 5/8
COLOR: White
GRID: 15/16
NOTE: Install on 45 degree angle

PLASTIC LAMINATE (IF NECESSARY)

PL-1
MFG: Pionite
COLOR: Slate Crepe
NO: AG351
FINISH: Suede

CULTURED MARBLE
COLOR: White on White

GENERAL DOOR HARDWARE
FINISH: Brushed Chrome

OUTLET COVERS/SWITCHES/RECEPTACLES/DATA AND PHONE RECEPTACLES
COLOR: White

ALTERNATE #2

ACOUSTICAL TILE (ALTERNATE FOR ACT-1)

ACT-3
MFG: Armstrong
PATTERN: Cortega Second Look
NO: 2767
EDGE: Angled Tegular
SIZE: 24 x 48 x 5/8 (looks like 24 x 24 squares)
COLOR: White
GRID: 15/16

NOTE: GIVE ALTERNATE PRICE TO REPLACE ACT-1 WITH ACT-3
SEE FINISH SCHEDULE FOR LOCATIONS OF ACT-1

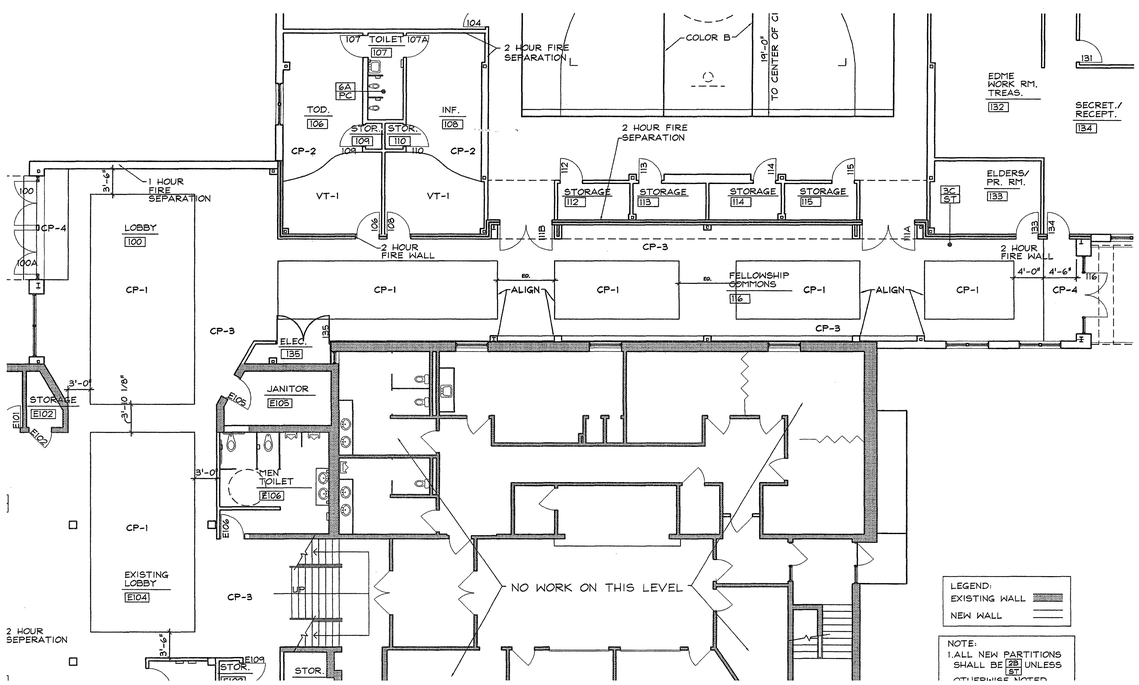

C3 / A9.01 CARPET PATTERN LAYOUT
1/8" = 1'-0"

Fletcher :: Architects, Inc.
ARCHITECTURE ■ PLANNING ■ INTERIORS
1906 NORTH SIGNAL HILLS DRIVE
KIRKWOOD, MO. 63122
TEL. (314) 965-6333
FAX. (314) 965-8997
info@fletcher-architects.com

CONSULTANTS

CIVIL ENGINEER:
FRONTENAC ENGR. GROUP, INC.
15 GUNNEN DR.
ST. LOUIS, MO 63143
PHONE (314) 644-2200
FAX (314) 644-0646

STRUCT. ENGINEER:
ABS CONSULTING
1848 LACKLAND HILLS PARKWAY
ST. LOUIS, MO 63146
PHONE (314) 994-7007
FAX (314) 994-0722

M.E.P. ENGINEER:
BSD ENGINEERING
550 SPIRIT OF ST. LOUIS BLVD.
CHESTERFIELD, MO 63005
PHONE (636) 530-7770
FAX (636) 530-7877

HARDWARE CONSULTANT
5710
5648 PIERRE CT.
ST. LOUIS, MO 63128
PHONE (314) 487-7776
FAX (314) 842-2242

KITCHEN CONSULTANTS
THE GEGGER GROUP
2601 WATSON ROAD
ST. LOUIS, MO 63139
PHONE (314) 645-2667
FAX (314) 645-3208

LANDSCAPE ARCHITECT
AUSTIN TAO AND ASSOC.
2101 LOCUST, 2ND. FLOOR
ST. LOUIS, MO 63103
PHONE (314) 436-3600
FAX (314) 436-0130

INTERIOR DESIGN
O'TOOLE DESIGN ASSOC.
124 WEST JEFFERSON
KIRKWOOD, MO 63122
PHONE (314) 909-1906
FAX (314) 909-1906

PROJECT:
ADDITION AND RENOVATIONS TO
McKnight Road
Church of Christ
2515 SOUTH MCKNIGHT ROAD
ST. LOUIS, MO 63124

THE SEAL AND SIGNATURES APPLY ONLY TO THE DOCUMENT TO WHICH THEY ARE AFFIXED, AND WE EXPRESSLY DISCLAIM ANY RESPONSIBILITY FOR ALL OTHER PLANS, SPECIFICATIONS, ESTIMATES, REPORTS, OR OTHER DOCUMENTS OR INSTRUMENTS RELATING TO OR INTENDED TO BE USED FOR ANY PART OR PARTS OF THE PROJECT.

COPYRIGHT 2002 FLETCHER ARCHITECTS, INC.

NO	DATE	REVISIONS
	00/00/01	ADDENDUM #0

PROJECT NO. 01403
SHEET NO. A9.01
DRAWN BY: SER
CHECKED BY: MEF
DATE: NOVEMBER 1, 2002

CONSTRUCTION/BID DRAWINGS

DOOR AND FRAME SCHEDULE

DOORS / FRAMES

DOOR NO.	DOOR TYPE	MAT'L	DOOR SIZE	HWD. GRP.	U.L. LABEL	GLASS TYPE	REMARKS	FRAME TYPE	FRAME MAT'L	DETAILS HEAD	DETAILS JAMB	DETAILS SILL	REMARKS
100	A	ALUM	3'-0" WIDE X 7'-0" HIGH (PAIR)	25	–		ALUM ENTRANCE	F2	ALUM		B1/ A8.02		
100A	A	ALUM	3'-0" WIDE X 7'-0" HIGH (PAIR)	25	–		ALUM ENTRANCE	F2	ALUM		C1/ A8.02		
101	D	WD.	3'-0" WIDE X 7'-0" HIGH	15	–			F3	H.M.	C3&C4/ A9.02	D4&D5/ A9.02	D3/ A9.02	
101A	D	WD.	3'-0" WIDE X 7'-0" HIGH	15	–			F4	H.M.	C3&C4/ A9.02	D4&D5/ A9.02	D3/ A9.02	
101B	F	WD.	3'-0" WIDE X 7'-0" HIGH (PAIR)	22	–			F2	H.M.		C5/ A9.02		
101C	F	WD.	3'-0" WIDE X 7'-0" HIGH (PAIR)	22	–			F2	H.M.		C5/ A9.02		
101D	F	WD.	3'-0" WIDE X 7'-0" HIGH (PAIR)	22	–			F2	H.M.		C5/ A9.02		
102	D	WD.	3'-0" WIDE X 7'-0" HIGH	15	–			F3	H.M.	C3&C4/ A9.02	D4&D5/ A9.02	D3/ A9.02	
103	F	WD.	3'-0" WIDE X 7'-0" HIGH (PAIR)	21	–			F2	H.M.		C5/ A9.02		
104	D	WD.	3'-0" WIDE X 7'-0" HIGH	15	–			F4	H.M.	C3&C4/ A9.02	D4&D5/ A9.02	D3/ A9.02	
105	F	WD.	3'-0" WIDE X 7'-0" HIGH (PAIR)	22	–			F2	H.M.		C5/ A9.02		
105A	E	WD.	3'-0" WIDE X 7'-0" HIGH	16	–			F2	H.M.		C5/ A9.02		
106	C	WD.	3'-0" WIDE X 7'-0" HIGH	6	B			F1	H.M.				
107	C	WD.	3'-0" WIDE X 7'-0" HIGH	9	–			F1	H.M.				
107A	C	WD.	3'-0" WIDE X 7'-0" HIGH	9	–			F1	H.M.		C5/ A9.02		
108	C	WD.	3'-0" WIDE X 7'-0" HIGH	6	B			F1	H.M.				
109	E	WD.	3'-0" WIDE X 7'-0" HIGH	17	–			F1	H.M.		C5/ A9.02		
110	E	WD.	3'-0" WIDE X 7'-0" HIGH	17	–			F1	H.M.		C5/ A9.02		
111	E	H.M.	3'-0" WIDE X 7'-0" HIGH	1	–			F1	H.M.				
111A	H	WD.	3'-0" WIDE X 7'-0" HIGH (PAIR)	2	B			F2	H.M.				
111B	H	WD.	3'-0" WIDE X 7'-0" HIGH (PAIR)	2	B			F2	H.M.				
112	E	WD.	3'-0" WIDE X 7'-0" HIGH	17	–			F1	H.M.		C5/ A9.02		
113	E	WD.	3'-0" WIDE X 7'-0" HIGH	17	–			F1	H.M.		C5/ A9.02		
114	E	WD.	3'-0" WIDE X 7'-0" HIGH	17	–			F1	H.M.		C5/ A9.02		
115	E	WD.	3'-0" WIDE X 7'-0" HIGH	17	–			F1	H.M.				
116	A	ALUM	3'-0" WIDE X 7'-0" HIGH (PAIR)	25	–			F2	ALUM				
117	D	WD.	3'-0" WIDE X 7'-0" HIGH	12	–			F1	H.M.				
118	E	WD.	1'-8" WIDE X 7'-0" HIGH	16	–			F1	H.M.				
119	D	WD.	3'-0" WIDE X 7'-0" HIGH	12	–			F1	H.M.		C5/ A9.02		
120	C	WD.	3'-0" WIDE X 7'-0" HIGH	20	–			F1	H.M.		C5/ A9.02		
121	D	WD.	3'-0" WIDE X 7'-0" HIGH	7	–			F1	H.M.				
122	D	WD.	3'-0" WIDE X 7'-0" HIGH	14	–			F1	H.M.		C5/ A9.02		
122A	D	WD.	3'-0" WIDE X 7'-0" HIGH	13	–			F1	H.M.		C5/ A9.02		
122B	I	WD.	3'-0" WIDE X 7'-0" HIGH X1-3/4"	24	–			N/A	N/A				BI-FOLD LOUVERED
123			NOT USED										
124	E	WD.	3'-0" WIDE X 7'-0" HIGH	20	–			F1	H.M.		C5/ A9.02		
125	E	WD.	3'-0" WIDE X 7'-0" HIGH	20				F1	H.M.		C5/ A9.02		
126	F	WD.	3'-0" WIDE X 7'-0" HIGH (PAIR)	22	–			F2	H.M.		C5/ A9.02		
127	F	WD.	3'-0" WIDE X 7'-0" HIGH (PAIR)	21	–			F2	H.M.		C5/ A9.02		
128	D	WD.	3'-0" WIDE X 7'-0" HIGH	15	–			F1	H.M.		C5/ A9.02		
129	E	WD.	3'-0" WIDE X 7'-0" HIGH	16	–			F1	H.M.		C5/ A9.02		
130	E	WD.	3'-0" WIDE X 7'-0" HIGH	20	–			F1	H.M.		C5/ A9.02		
131	E	WD.	3'-0" WIDE X 7'-0" HIGH	20	–			F1	H.M.		C5/ A9.02		
132			NOT USED										
133	D	WD.	3'-0" WIDE X 7'-0" HIGH	8	B			F1	H.M.				
134	C	WD.	3'-0" WIDE X 7'-0" HIGH	8	B			F1	H.M.				
135	F	WD.	3'-0" WIDE X 7'-0" HIGH (PAIR)	23	–			F2	H.M.				
E100	H	WD.	3'-0" WIDE X 7'-0" HIGH (PAIR)	3	B			F2	H.M.				
E100A	H	WD.	3'-0" WIDE X 7'-0" HIGH (PAIR)	3	B			F2	H.M.				
E100B	H	WD.	3'-0" WIDE X 7'-0" HIGH (PAIR)	3	B			F2	H.M.				
E100C	–	–	EXISTING	26	–			–	–				EXISTING
E100D	–	–	EXISTING	26	–			–	–				EXISTING
E101	E	WD.	3'-0" WIDE X 7'-0" HIGH	4	B			F1	H.M.				
E102			NOT USED (EXISTING)										
E103	E	WD.	3'-0" WIDE X 7'-0" HIGH	5	B			F1	H.M.				
E104			NOT USED										
E105	E	WD.	3'-0" WIDE X 7'-0" HIGH	18	–			F1	H.M.				
E106	D	WD.	3'-0" WIDE X 7'-0" HIGH	12	–			F1	H.M.				
E107	E	WD.	3'-0" WIDE X 7'-0" HIGH	16	–			F1	H.M.				
E108	D	WD.	3'-0" WIDE X 7'-0" HIGH	11	–			F1	H.M.				
E109	E	WD.	3'-0" WIDE X 7'-0" HIGH	17	–			F1	H.M.				
E110	E	WD.	3'-0" WIDE X 7'-0" HIGH	17	–			F1	H.M.				
E111	E.1	WD.	3'-0" WIDE X 7'-0" HIGH	19	–			F1	H.M.				
E112			NOT USED										
E401	–	–	EXISTING	10	–			–	–				EXISTING
E404	–	–	3'-8" WIDE X 7'-0" HIGH	27	B			F5	–				

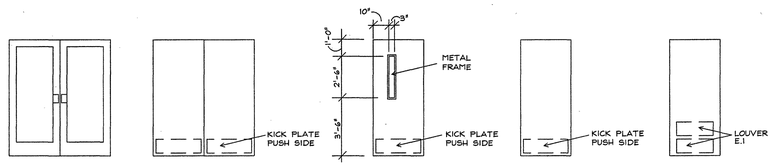

DOOR TYPES

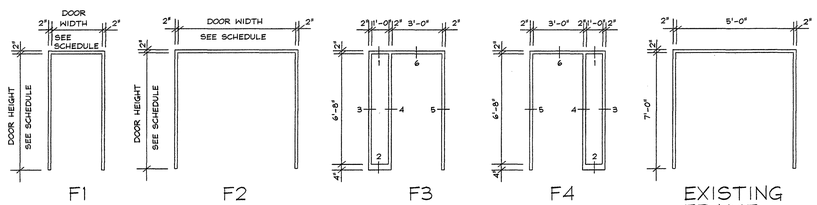

NOTE:
ADD VERTICAL STRIKE MULLION & SILL SECTION TO RH LEAF OF FRAME-INSTALL UL HOLLOW METAL PANEL-INSTALL 3 HINGE FILLER PLATES @ RH LEAF-SEE HARDWARE SCHEDULE FOR PREPS & REINFORCING REQUIREMENTS

FRAME TYPES

ABBREVIATIONS

H.M.	HOLLOW METAL
WD.	WOOD DOOR
ALUM.	ALUMINUM

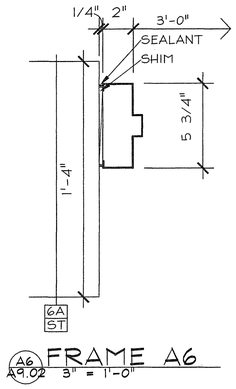

A6/A9.02 FRAME A6
3" = 1'-0"

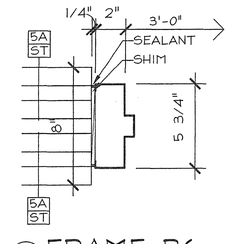

B6/A9.02 FRAME B6
3" = 1'-0"

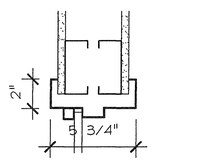

C3/A9.02 1 SIDE LIGHT HEAD
3" = 1'-0"

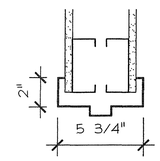

C4/A9.02 6 DOOR HEAD
3" = 1'-0"

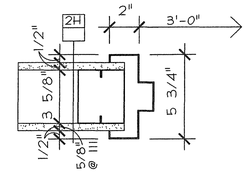

C5/A9.02 JAMB @ TYPICAL PARTITION
3" = 1'-0"

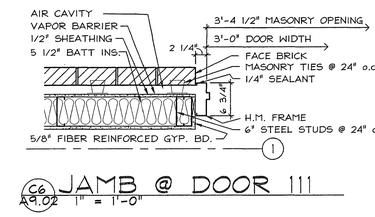

C6/A9.02 JAMB @ DOOR 111
1" = 1'-0"

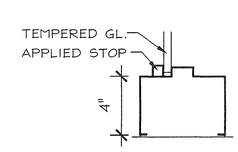

D3/A9.02 2 SIDELIGHT SILL
3" = 1'-0"

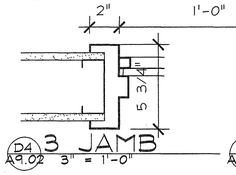

D4/A9.02 3 JAMB
3" = 1'-0"

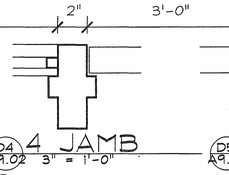

D4/A9.02 4 JAMB
3" = 1'-0"

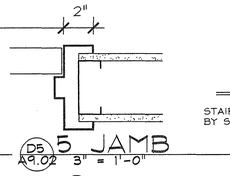

D5/A9.02 5 JAMB
3" = 1'-0"

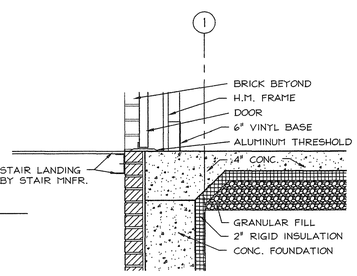

D6/A9.02 SILL @ DOOR 111
1" = 1'-0"

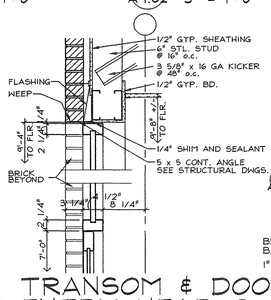

D4/A9.02 TRANSOM & DOOR ENTRY HEAD @
1" = 1'-0"

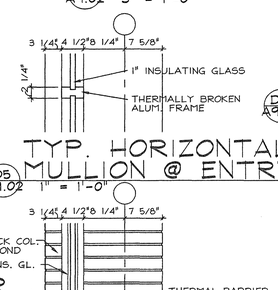

D5/A9.02 TYP. HORIZONTAL MULLION @ ENTRY GL.
1" = 1'-0"

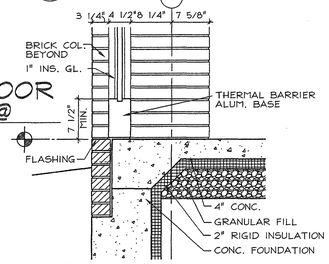

E5/A9.02 SILL @ GLASS ENTRY
1" = 1'-0"

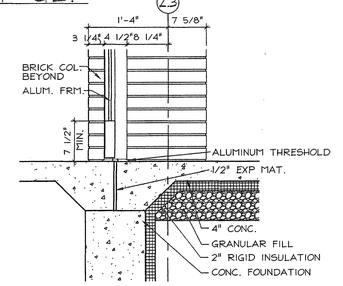

E6/A9.02 SILL @ SOUTH ENTRY
1" = 1'-0"

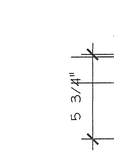

E3/A9.02 SECTION A
3" = 1'-0"

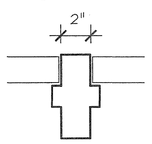

E4/A9.02 SECTION AM
3" = 1'-0"

Fletcher :: Architects, Inc.
ARCHITECTURE ■ PLANNING ■ INTERIORS
1906 NORTH SIGNAL HILLS DRIVE
KIRKWOOD, MO. 63122
TEL. (314) 965-6333
FAX. (314) 965-8997
info@fletcher-architects.com

CONSULTANTS

CIVIL ENGINEER:
FRONTENAC ENGR. GROUP, INC.
15 SUNKEN DR.
ST. LOUIS, MO 63143
PHONE (314) 644-2200
FAX (314) 644-0846

STRUCT. ENGINEER:
ABB CONSULTING
1648 LACKLAND HILLS PARKWAY
ST. LOUIS, MO 63146
PHONE (314) 994-7007
FAX (314) 994-0722

M.E.P. ENGINEER:
SSC ENGINEERING
650 SPIRIT OF ST. LOUIS BLVD.
CHESTERFIELD, MO 63005
PHONE (636) 530-7770
FAX (636) 530-7877

HARDWARE CONSULTANT
STO
5555 PIERRE CT.
ST. LOUIS, MO 63128
PHONE (314) 487-7776
FAX (314) 842-2242

KITCHEN CONSULTANTS
THE GEIGER GROUP
5501 WATSON ROAD
ST. LOUIS, MO 63139
PHONE (314) 645-0067
FAX (314) 645-2206

LANDSCAPE ARCHITECT
AUSTIN TAO, AND ASSOC.
2101 LOCUST, 2ND. FLOOR
ST. LOUIS, MO 63103
PHONE (314) 436-5999
FAX (314) 436-9130

INTERIOR DESIGN
O'TOOLE DESIGN ASSOC.
124 WEST JEFFERSON
KIRKWOOD, MO 63122
PHONE (314) 909-9105
FAX (314) 909-1908

PROJECT:
ADDITION AND RENOVATIONS TO
McKnight Road
Church of Christ
2515 SOUTH MCKNIGHT ROAD
ST. LOUIS, MO 63124

THE SEAL AND SIGNATURES APPLY ONLY TO THE DOCUMENT TO WHICH THEY ARE AFFIXED, AND WE EXPRESSLY DISCLAIM ANY RESPONSIBILITY FOR ALL OTHER PLANS, SPECIFICATIONS, ESTIMATES, REPORTS OR OTHER DOCUMENTS OR INSTRUMENTS RELATING TO OR INTENDED TO BE USED FOR ANY PART OR PARTS OF THE PROJECT.

COPYRIGHT 2002 FLETCHER ARCHITECTS, INC.

NO	DATE	REVISIONS
	00/00/01	ADDENDUM #0

PROJECT NO. 01403
DRAWN BY: SER
CHECKED BY: MEF
DATE: NOVEMBER 1, 2002

SHEET NO. A9.02

CONSTRUCTION/BID DRAWINGS

STRUCTURAL GENERAL NOTES

DIVISION 1 - GENERAL REQUIREMENTS

1.1 CONSTRUCTION MEANS AND METHODS

A. Contractor agrees that Contractor shall assume sole and complete responsibility for job site conditions during the course of the Work, including safety of all persons and property; that this requirement shall apply continuously and not be limited to normal working hours; and that Contractor shall defend, indemnify and hold Owner and Structural Engineer harmless from any and all liability, real or alleged, in connection with the performance of the Work on this Project, excepting for liability arising from the sole negligence of Owner or Structural Engineer.

B. The Contract Documents represent the finished structure. They do not include the method of construction. Contractor shall provide all measures necessary to protect the structure during construction. Such measures shall include, but not be limited to: bracing, shoring for loads due to construction equipment, temporary structures, and partially completed work. Observation visits to the site by Structural Engineer shall not include inspection of the above items.

C. ABS Consulting shall not have control over or charge of and shall not be responsible in any way for construction means, methods, techniques, sequences, or procedures, or for safety or safety precautions and programs in connection with any construction activities, since these are solely Contractor's responsibility under the Contract.

D. ABS Consulting shall not be responsible for Contractor's schedule or failures to carry out any construction activities in accordance with the Contract Documents. ABS Consulting shall not have control over or charge of actions of Contractor, Subcontractor, or any of their Agents, or employees, or any other persons performing portions of any construction activities.

E. The structure is stable only in its completed form. Temporary supports required for stability of the structure during all intermediate stages of construction shall be designed and provided by Contractor.

1.2 SUBMITTALS

A. Submittals prepared by Subcontractors shall be reviewed by Contractor prior to submitting to Structural Engineer.

B. Reproduction of the Contract Documents for Shop Drawings is not permitted. Electronic drawing files will not be provided to Contractor.

C. Contractor shall verify the structurally supported equipment weights, opening sizes, and locations indicated on the Structural Drawings with Documents from other disciplines and notify Architect of any discrepancies.

D. Contractor shall submit Shop Drawings showing size, method of anchorage, weight, openings, and locations of equipment not indicated on the Structural Drawings prior to ordering for review by Structural Engineer to determine adequacy of the structure.

E. All submittals reviewed by Structural Engineer are reviewed for general conformance with the design concept of the Project and general compliance with the information indicated in the Contract Documents. Any action indicated is subject to the requirements of the Contract Documents. Contractor is responsible for correlating and confirming dimensions at the job site, choice of fabrication processes and techniques of construction, and coordination of the work with that of other trades.

F. Submittals shall be reviewed within 10 working days after being received by Structural Engineer.

1.3 QUALITY REQUIREMENTS

A. Reference to standard specifications or codes of any technical society, organization, or association or to codes of local or state authorities, shall mean the standards in effect as of date of the Contract Documents, unless otherwise noted.

B. Contract Documents shall govern in the event of a conflict with standard specifications or codes of any technical society, organization, or association.

C. No provision of any referenced standard specification or code, whether or not specifically incorporated by reference in the Contract Documents, shall be effective to change the duties and responsibilities of Owner, Architect, Structural Engineer, Contractor, or any of their Consultants, Agents, or employees from those set forth in the Contract Documents, nor shall it be effective to assign to Structural Engineer or any of Structural Engineer's Consultants, Agents, or employees any duty or authority to supervise or direct the furnishing or performance of the Work or any duty or authority to undertake responsibilities contrary to the provisions of the Contract Documents.

D. All omissions and conflicts within the Contract Documents shall be brought to the attention of Architect prior to proceeding with the Work.

E. Contractor shall verify dimensions and conditions at the job site. Any discrepancies between the conditions found and those indicated in the Contract Documents shall be brought to the attention of Architect prior to proceeding with the Work.

F. No pipes, ducts, chases, etc. shall be placed in structural beam and column members nor shall any structural member be cut for pipes, ducts, etc., unless noted otherwise. Notify Structural Engineer when Documents by other disciplines show openings, pockets, etc. not indicated in the Structural Drawings, but are located in structural members. Contractor shall obtain prior approval from Structural Engineer for installation of such pipes, ducts, chases, etc.

6. Details labeled "Typical" on the Structural Drawings apply to all situations occurring on Project that are the same or similar to those locations specifically indicated. Where a detail is not indicated, the detail shall be the same as for other similar conditions.

H. Contractor designed elements shall be designed by licensed Professional Engineers registered in the State where Project is located. Contractor shall submit Shop Drawings, design load data, support reactions, and certification that elements were designed for loads specified in the Contract Documents or in the Building Code. All documents noted shall be sealed by the licensed Engineer. If criteria indicated are not sufficient, submit a written request for additional information to Architect. The following elements and their connections shall be Contractor designed:

1. Temporary bracing and shoring
2. Structural steel connections
3. Open web steel joists
4. Cold-formed metal framing
5. Stairs and Ladders
6. Basketball Goals and Support Connections

1.4 DESIGN CRITERIA:

A. The structure is designed in accordance with the BOCA National Building Code, 1996 Edition.

B. No provisions have been made for future horizontal or vertical expansion.

C. Gravity Loads:

1. Uniform Roof Live Loads:
   a. Live Load: 20 psf
   b. Snow Load:
      1) Ground Snow Load: 20 psf
      2) Flat Roof Snow Load: 22 psf
      3) Snow Exposure Factor: 1.0
      4) Snow Importance Factor: 1.1
      5) Snow Thermal Factor: 1.0
2. Concentrated Lateral Live Loads
   a. Handrails assemblies:
      1) Top Rail: 200 lb. or 50 lb/ft applied non-concurrently in any direction.
      2) Infill: 50 lb. applied over 1 sq. ft. applied non-concurrently with the top rail load.
   b. Vehicle barrier systems: 6,000 lb. applied over an area of 1 sq. ft. at 18" above the floor.

D. Lateral Loads:

1. Wind Loads
   a. Basic Wind Speed: 30 MPH
   b. Importance Factor: 1.15
   c. Exposure: C
   d. Internal Pressure Coefficient: 0.25
2. Earthquake Load:
   a. Peak Velocity-Related Acceleration, Av: 0.13
   b. Peak Acceleration, Aa: 0.13
   c. Seismic Hazard Exposure Group: II
   d. Seismic Performance Category: C
   e. Soil Profile Type: S3 = 1.5
   f. Basic Structural System: Building Frame
   g. Seismic Resisting System: Concentric Braced Frame
   h. Response Modification Factor, R: 5
   i. Deflection Amplification Factor, Cd: 4.5
   j. Analysis Procedure: Equivalent lateral force procedure

DIVISION 2 - FOUNDATIONS

2.1 GENERAL

A. Foundation design is based upon recommendations in the geotechnical report prepared by Professional Service Industries, Inc. dated 5 December 2002. Structural Engineer is not responsible for subsurface conditions encountered in the field that are different from those assumed in design.

B. Owner's Geotechnical Representative shall certify the bearing medium.

C. Excavations shall be kept free of loose material and standing water.

2.2 FOOTINGS

A. Individual spread footings and continuous footings shall bear on and be formed by clean, undisturbed, virgin, sub-soil or compacted engineered fill with an allowable bearing pressure of 3000 psf and 2500 psf, respectively.

1. No footing shall bear on rock. Undercut rock a minimum of 2 feet below the bottom of footing and replace with compacted engineered fill.

DIVISION 3 - CONCRETE

3.1 REINFORCING

A. GENERAL

1. Reinforcing steel shall be ASTM A615, Grade 60, deformed bars, unless noted otherwise. Welding of ASTM A615, Grade 60 reinforcing is not allowed.
2. Welded wire fabric shall be ASTM A185 and shall be contact lap spliced two full wire spaces.
3. All reinforcing bars shall be detailed, fabricated, supported, and placed in accordance with ACI 315-99 "Details and Detailing of Concrete Reinforcement" and CRSI's "Manual of Standard Practice," 1998.
4. Reinforcing, including dowels, shall be securely tied and cast with the lower member. Placing reinforcing after concrete has been placed is not permitted.
5. Field bending of reinforcing partially embedded in concrete is not allowed unless specifically noted in the Structural Documents or approved by Structural Engineer.
6. Provide dowels from foundation the same grade, size, and number as vertical wall or column reinforcing, unless noted otherwise.
7. Provide corner bars to match horizontal reinforcing at corners and intersections.
8. Mechanical couplers shall be uni-axial type capable of developing 125% of the specified yield strength of the bar in tension.
4. All reinforcing shall be contact lap spliced or doweled as follows:

#3 bars -- 28"	#7 bars -- 81"
#4 bars -- 37"	#8 bars -- 93"
#5 bars -- 47"	#9 bars -- 105"
#6 bars -- 56"	#10 bars -- 118"
	#11 bars -- 131"

B. WALLS

1. Provide #4 at 12" o.c. horizontal and vertical in each face of all walls 10" and thicker, unless noted otherwise.
2. Provide #4 at 12" o.c. horizontal and vertical at center of all walls 8" and thinner, unless noted otherwise.

C. BEAMS

1. Provide 2-#5 stirrup spacers in all beams.

D. SLABS

1. Provide slab bolsters, high chairs, and #5 support bars as necessary to maintain proper placement of reinforcing.
2. Provide 2-#5 top x 5'-0" diagonals at corners of openings and re-entrant corners, unless noted otherwise.

3.2 CAST-IN-PLACE CONCRETE

A. Reinforced concrete shall have the following minimum 28-day compressive strengths:

1. Class A 3000 psi normal weight concrete
2. Class B 4000 psi normal weight concrete

B. Place concrete as follows:

1. Class A:
   a. Spread Footings
   b. Housekeeping pads
2. Class B:
   a. Foundation walls
   b. Slab-on-grade

C. All concrete to have the following unit weights (+/- 3 pcf):

1. Normal weight concrete: plastic = 145 pcf

D. All concrete exposed to freezing and thawing and deicer chemicals shall have 6% (+1%/-1.5%) air entrainment. Do not air entrain concrete to be trowel finished.

E. Provide concrete cover for reinforcing as follows:

1. Concrete cast against and permanently exposed to earth.....3"
2. Concrete exposed to earth or weather.....2"
3. Concrete not exposed to weather or in contact with ground:
   a. Slabs and walls.....3/4"
   b. Beams and columns.....1-1/2"

F. Provide construction or control joints in slab-on-grade as indicated in the Structural Drawings. If joint pattern is not indicated, provide joints at approximately 10 feet (+/-) in both directions and located to conform to bay spacing wherever possible (at column centerlines, half bays, third bays, etc.).

6. Construction joints in walls shall be keyed and placed at locations approved by Architect and Structural Engineer.

H. Locate construction joints for joists, beams, girders, and slabs in the middle 1/3 of the span. Place joints so they do not compromise the strength of the structure. Offset joints in a girder at least twice the beam width from a beam/girder intersection.

I. Interface of construction joints shall be roughened to a full amplitude of 1/4". Surface of construction joints shall be clean and free of laitance. Immediately before new concrete is placed, construction joints shall be wetted and standing water removed.

J. Locate control joints in retaining walls at 10 feet to 15 feet intervals.

K. See Architectural Drawings for waterstops.

L. Provide compressible filler and sealant in slab-on-grade and wall and column interfaces that are not doweled together.

M. All column pockets shall be filled with concrete after column is erected.

N. Conduit and pipes embedded in walls, beams, or slabs shall be no larger in outside dimension than 1/3 the overall member thickness or 2" maximum, and shall be placed no closer than 3 diameters or widths on center.

O. Conduit and pipes, with their fittings, embedded within a column shall not displace more than 4 percent of the area of the column cross section.

P. Provide 4" high concrete housekeeping pads under equipment. Pads shall extend beyond equipment 6" nominal on all sides. Apply bonding agent to existing concrete slab prior to placing housekeeping pad. See Documents from other disciplines for equipment locations.

Q. At floor drains, locally slope floor towards drain. See Documents from other disciplines for drain locations.

R. See Architectural Documents for molds, grooves, ornaments, clips, etc. required to be encased in concrete and for location of floor finishes and slab depressions.

DIVISION 4 - CONCRETE MASONRY

4.1 REINFORCING

A. Reinforcing steel shall be ASTM A615, Grade 60, deformed bars, unless noted otherwise. Welding of ASTM A615, Grade 60 reinforcing is not allowed.

B. Joint reinforcing shall be truss type conforming to ASTM A951, with prefabricated corner and tee units at corners and intersections.

C. Dowels to supporting structure shall be same grade, size, and number as vertical reinforcing.

D. Provide corner bars to match horizontal reinforcing at corners and intersections.

E. Vertical reinforcing shall be centered in wall, unless noted otherwise.

F. Reinforcing shall be lapped 40 bar diameters with contact lap splices. Joint reinforcing shall be lapped 6".

6. Reinforce concrete masonry vertically with #5 rebar full height at 32" o.c., unless noted otherwise.

H. Space joint reinforcement at 16" o.c. vertically typical and at 8" o.c. vertically at parapets and at cantilevered walls, unless noted otherwise.

I. Reinforce bond beams with 2-#5 rebars continuous, unless noted otherwise.

J. Provide (2) #5 rebar at top and bottom of openings, to extend a minimum of 30" beyond the opening and (2) #5 vertical bars in jamb of all openings full height of wall, unless noted otherwise.

4.2 CONCRETE MASONRY

A. Concrete masonry units shall be ASTM C90, lightweight.

B. Provide concrete unit masonry that develops the following minimum net-area compressive strength (f'm) at 28-days: 2000 psi.

G. Mortar shall be of the following types:

Walls below grade:	Type M
Bearing walls:	Type M or S

D. Grout shall conform to ASTM C476. Grout shall be proportioned with a slump of 8" to 11" using 3/8" nominal maximum size course aggregate.

E. Grout vertical reinforced cells and bond beams solid.

F. Grout concrete masonry below grade solid. Grout cavities of multi-wythe walls below grade.

6. All vertical cells to be grouted shall have vertical alignment to maintain a continuous unobstructed cell area not less than 2" x 3".

H. Grout three courses of concrete masonry supporting steel. Bottom course shall be a bond beam.

I. Conduits, pipes, and sleeves shall be no closer than 3 diameters on center.

J. Maximum area of vertical conduits, pipes, or sleeves placed in columns or pilasters shall not displace more than 2 percent of the net cross section.

DIVISION 5 - METALS

5.1 STRUCTURAL STEEL

A. GENERAL

1. Structural steel shall be fabricated and erected in accordance with the AISC "Load and Resistance Factor Design Specification for Structural Steel Buildings," 1993 with Supplement No. 1.
2. Materials shall conform to the following, unless noted otherwise.

a. W's and WT's	ASTM A992
b. Plates & other shapes	ASTM A36
c. HSS: Sq. & Rect.	ASTM A500, Grade B
d. Pipe	ASTM A53, Type E or S, Grade B
e. Bolts hex head	ASTM A325, 3/4" diameter (min.),
f. Anchor Rods and heavy hex nuts	ASTM F1554, Grade 55 with A36 washers
g. Threaded Rod	ASTM A36
h. Headed Studs	ANS D1.1, Type B
i. Electrodes	Matching strength, 70 ksi min.

3. Detail steel beam connections as simple span beams, unless noted otherwise.
4. Beam connections not fully detailed shall be designed by Contractor for loads based upon AISC span-load tables.
   a. Minimum beam shear reaction is 10 kips.
5. All bolted connections shall be designed as snug-tight bearing connections with threads included in the shear plane, unless noted otherwise.
6. Bolted connections at the following locations shall be designed as fully tensioned bearing connections with threads included in the shear plane:
   a. Moment frames
   b. Vertical bracing
   c. Column splices
   d. Hangers
7. Bolted connections designated as fully tensioned shall be installed with direct-tension indicator washers or tension-control bolts.
8. All steel beams bearing on concrete or masonry shall have 8" minimum bearing, unless noted otherwise.
9. Where lintels are to be anchored to concrete or masonry, except at column baseplates, use standard sized holes in steel member, unless noted otherwise.
10. Use prequalified welded joints in accordance with AISC and AWS D1.1:2000. Non-prequalified joints shall be qualified prior to fabrication.

B. STEEL LINTELS

1. Loose lintels for 4" and 8" masonry shall be the following, one angle (LLV) per 4" width of masonry:

L3-1/2x3-1/2x5/16	for spans less than 4'-11
L5x3-1/2x5/16	for spans between 5'-0" and 7'-11"
L6x3-1/2x5/16	for spans between 8'-0" and 9'-11"
L7x4x3/8	for spans between 10'-0" and 12'-11"

2. Loose lintels for 6" and 12" masonry shall be the following, one angle per 6" width of masonry:

L5x5x5/16	for spans less than 4'-11"
L5x5x3/8	for spans between 5'-0" and 8'-0"

3. Double angle lintels back to back shall be bolted at 32" o.c. maximum spacing, with 5/8" diameter A307 bolts, minimum of two bolts per span.
4. At beam lintels with continuous plates, the plate width shall be 1" less than the nominal width of the supported wall. Plate thickness shall be 5/16", unless noted otherwise.
5. Lintels bearing on masonry or concrete shall have 8" minimum bearing, unless noted otherwise.
   a. Each lintel, unless noted otherwise, shall be field welded to an embedded plate with two 3" long x 3/16" fillet welds. Minimum width of embedded steel plate shall be 4" larger than the beam flange width.
   b. Where less than 1'-0" of masonry exists at the end of the beam adjacent to a column, wall, or other vertical member, extend the beam and provide a connection to the column or wall.
6. Exterior lintels whether loose or attached to the structure shall be painted.
7. Contractor shall coordinate with the Structural Drawings and Documents of other disciplines for openings.

C. ANCHORS TO CONCRETE AND MASONRY

1. Anchors shall be adhesive anchors, unless noted otherwise.
2. Adhesive anchors shall be Hilti HIT HY adhesive anchors or approved equal. Use HY 150 adhesive when anchoring into solid base material. Use HY 20 adhesive plus a screen tube when anchoring to or through hollow base material. Anchors shall be plain, uncoated except provide galvanized anchors where supported item is galvanized.
3. When installing anchors, do not cut existing reinforcing. Install anchors to accommodate the standard hole size in steel.
4. Adhesive anchor embedment depth shall be as follows, unless noted otherwise:

3/8" diam. :	3-1/2" embedment
1/2" diam. :	4-1/4" embedment
5/8" diam. :	5" embedment
3/4" diam. :	6-5/8" embedment
1" diam. :	8-1/4" embedment

5.2 STEEL JOISTS

A. GENERAL

1. Steel joists without specified chord size or designated as SP shall be designed by Contractor for the superimposed loads indicated in the Structural Drawings. Where joists are designated similar to 24Kxxx kyyy, xxx is the total service load in pounds/ft and yyy is the live load in pounds/ft. Loads indicated do not contain allowance for the self weight of the joists.
2. Steel joists shall have bridging sized and spaced in accordance with SJI Standard Specifications.
3. Steel joists shall be designed for a minimum net uplift of 4 psf in field of roof and 7 psf within 5'-0" strip adjacent to roof edges.

B. K-SERIES JOISTS

1. Steel K joists shall be designed, fabricated, and erected in accordance with SJI "Standard Specifications for Open Web Steel Joists, K-Series," 1994.
2. Steel K joists shall have a minimum bearing length of 2-1/2" on steel supports. Each joist, unless noted otherwise, shall be field welded to the supporting steel with two 1" long x 1/8" fillet welds.
3. Field bolt joists located at columns for stability during erection with two 3/4" diameter bolts.

C. LONGSPAN LH-SERIES AND DLH-SERIES STEEL JOISTS

1. Steel LH and DLH joists shall be designed, fabricated, and erected in accordance with SJI "Standard Specifications for Longspan Steel Joists, LH-Series and Deep Longspan Steel Joists, DLH-Series," 1994.
2. Steel LH and DLH joists shall have a minimum bearing length of 4" on steel supports. Each joist, unless noted otherwise, shall be field welded to the supporting steel with two 2" long x 1/4" fillet welds.
3. Field bolt joists located at columns for stability during erection with two 3/4" diameter bolts.

5.3 METAL DECK

A. GENERAL

1. Deck shall be continuous over 3 spans, unless specifically indicated otherwise.
2. At supports parallel to the deck span, raise steel supports or provide shims at fastening points if the deck valley does not engage the support.
3. Where deck is welded to supports, provide welding washers for deck with design thickness less than 0.028".
4. At Contractor's option, Hilti X-EDN and ENP fastening systems or approved equal may be used in lieu of welds to supports.

B. ROOF DECK

1. Roof deck shall be designed, fabricated, and installed in accordance with "SDI Specifications and Commentary for Steel Roof Deck" in SDI Publication No. 29, 1995.
2. Roof deck shall be painted.
3. 1-1/2" wide rib roof deck with design thickness 0.0295" (22 gauge) shall have the following minimum properties: I=0.169 in^4/ft, Sp=0.186 in^3/ft, Sn=0.142 in^3/ft, Fy=33 ksi
4. 2" acoustical roof deck with design thickness 0.0358" (20 gauge) shall be Epic ER2RA or approved equal.
5. Canopy roof deck to be single span 3" cellular type 3NP with minimum design thickness 0.0358" /0.0358" (20/20 gauge hat/pan) shall have the following minimum properties: I=1.465 in^4/ft, Sp=0.61 in^3/ft, Sn=0.976 in^3/ft, Fy=33 ksi.
5. Do not support ducts, ceilings, lights, plumbing, sprinklers, etc. from the roof deck.
6. Roof deck shall be welded to supports, both perpendicular and parallel to the deck, with 5/8" diameter puddle welds and fastened at sidelaps with No. 10 screws as follows.
   a. Typical installation, unless noted otherwise:
      1) Weld Pattern: 36/5
      2) Sidelap Fasteners: 4/span, maximum 18"
   b. At 2" acoustical roof deck:
      1) Weld Pattern: 24/4
      2) Sidelap Fasteners: 4/span, maximum 18"
   c. 3" cellular roof deck:
      1) Weld Pattern: 24/4
      2) Sidelap Fasteners: 8/span, maximum 18"

5.4 COLD-FORMED METAL FRAMING

A. Cold-formed metal framing shall be designed, fabricated, and erected in accordance with AISI's "Specification for the Design of Cold-Formed Steel Structural Members," 1996.

B. Complete, uniform, and level bearing support shall be provided for the top and bottom tracks of stud walls, or full size shims shall be installed to provide such bearing.

C. Studs shall be installed with their bearing ends positioned flush against the inside track web.

D. Full-height double studs shall be provided at the ends of partitions, at wall openings, beneath bar joists, beneath trusses, and at other locations indicated in the Structural Drawings.
   1. Weld the flanges of double studs together full height using 2" of weld at 12" o.c. each side.

E. Anchor stud tracks with low-velocity ponder actuated fasteners with a minimum shank diameter of 0.145", and a minimum penetration of 1-1/8".
   1. Locate anchors at 3" from the ends of partitions, and at 6" o.c. (maximum), 4" o.c. (minimum) throughout.

F. Provide sheathing attached to both faces of wall studs throughout the length of the studs.

G. Provide stud wall bridging according to manufacturer's recommendations.

H. Provide stiffeners in webs of joists at bearing points and at locations of concentrated loads.

I. Splices in studs shall not be permitted. Do not cut studs.

J. Slide clips shall be capable of resisting a lateral force of 500 lbs.

K. Wall studs shall have the following minimum effective properties. In the designation below, 362 is the member depth in 1/100 inches, S is the member style, 162 is the flange width in 1/100 inches, and 54 is the material thickness in mils.

Designation	Design Thick.	Ix, in4	Sx, in3	A, in2	Fy, ksi
362S162-43	0.0451	0.760	0.398	0.468	33
362S162-54	0.0566	0.873	0.468	0.422	50
600S162-43	0.0451	2.316	0.767	0.447	33
600S162-54	0.0566	2.860	0.421	0.566	50

L. At locations requiring welding of or to metal studs, minimum stud thickness shall be 54 mil.

M. Provide 54 mil track at top and bottom of stud walls, and at headers for stud walls.

1/2

1 = SECTION NO.
2 = SHEET WHERE SECTION IS DRAWN

SECTION SYMBOL

LIST OF ABBREVIATIONS

ABOVE FINISH FLOOR	AFF	LONG	LG
ADDENDUM	ADD	LONG LEG HORIZONTAL	LLH
ADDITIONAL	ADDNL	LONG LEG VERTICAL	LLV
ALTERNATE	ALT	LOW POINT	LP
ANCHOR, ANCHORAGE	ANCH		
ANCHOR BOLT	AB	MANUFACTURER	MFR
APPROXIMATE	APPROX	MASONRY	MAS
ARCHITECT	ARCH	MAXIMUM	MAX
		MECHANICAL	MECH
BOTTOM OF	B/	METAL	MTL
BALANCE	BAL	MEZZANINE	MEZZ
BEAM	BM	MIDDLE	MID
BEARING	BRG	MINIMUM	MIN
BENT	BT	MISCELLANEOUS	MISC
BETWEEN	BTWN		
BLOCKING	BLKG	NEAR FACE	NF
BOTTOM	BOT	NEAR SIDE	NS
BOTTOM OF METAL DECK	BMD	NOT IN CONTRACT	NIC
BOTTOM OF PIER	BP	NOT TO SCALE	NTS
BUILDING	BLDG	NUMBER	NO
CENTER	CTR	ON CENTER	OC
CENTER-LINE	CL	OPENING	OPNG
CLEAR	CLR	OPPOSITE	OPP
COLUMN, COLUMNS	COL	OPPOSITE HAND	OPPHD
CONCRETE	CONC	OUT TO OUT	O.O.
CONCRETE MASONRY UNIT	CMU	OUTSIDE DIAMETER	OD
CONNECT, CONNECTION	CONN		
CONSTRUCTION	CONST	PIER CAP, PILE CAP	PC
CONSTRUCTION OR	CJ	PLATE	PL
CONTROL JOINT		PLYWOOD	PLYWD
CONTINUE, CONTINUOUS	CONT	POINT	PT
CONTRACTOR	CONTR	POUND PER SQUARE FOOT	PSF
		POUND PER SQUARE INCH	PSI
DEAD LOAD	DL	PRECAST	P/C
DEGREE	DEG	PREFABRICATED	PREFAB
DIAGONAL	DIAG		
DIAMETER	DIA	RADIUS	RAD
DIMENSION	DIM	REFER, REFERENCE	REF
DRAG STRUT	DS	REINFORCING OR	REINF
DOWEL	DWL	REINFORCEMENT	
DOWN	DN	REQUIRED	REQD
DRAWING	DWG	REVISION, REVISED	REV
		RISER	R
EACH	EA	ROOF TOP UNIT	RTU
EACH FACE	EF		
EACH WAY	EW	SCHEDULE	SCHED
ELEVATION	EL	SECTION	SECT
ELEVATOR	ELEV	SHEAR WALL	SW
EMBEDMENT	EMBED, EMB	SHEET	SHT
ENGINEER	ENG	SHEET METAL	SHTMTL
EQUAL	EQ	SIMILAR	SIM
EXISTING	EXIST OR (E)	SPACE	SPA
EXPANSION	EXP	SPECIFICATIONS	SPEC
EXPANSION JOINT	EJ	SPECIAL	SP
EXTERIOR	EXT	SQUARE	SQ
		STAINLESS STEEL	S.S.
FAR FACE	FF	STANDARD	STD
FAR SIDE	FS	STEEL	STL
FINISH, FINISHED	FIN	STIFFENER	STIFF
FLANGE	FLG	STRUCTURAL	STRUC
FLOOR	FLR	SYMMETRICAL	SYM
FOOTING	FTG		
FOUNDATION	FDN	THICK, THICKNESS	THK
		THREAD, THREADED	THD
GALVANIZED	GALV	TIE BEAM	TB
GAUGE	GA	TO BE REMOVED	TBR
GIRDER	GDR	TOP OF	T/
GLUE-LAMINATED BEAM	GLB	TOP OF BOTTOM	T/B
GRADE	GR	TOP OF CONCRETE	T/C
GRADE BEAM	GB	TOP OF FOOTING	T/F
		TOP OF MASONRY	T/M
HEADED	HD	TOP OF PIER CAP	T/PC
HEADER	HDR	TOP OF PILASTER	T/P
HEIGHT	HT	TOP OF STEEL	T/S
HOOK	HK	TOP OF WALL	T/W
HORIZONTAL	HORIZ, HOR	TREAD	T
		TYPICAL	TYP
INFORMATION	INFO		
INSIDE DIAMETER	ID	UNLESS NOTED OTHERWISE	UNO
INTERIOR	INT		
		VERTICAL BRACE	VB
JOINT	JT	VERTICAL, VERTICALLY	VT OR VERT
JOIST	JST		
		WELDED WIRE FABRIC	WWF
KNEE BRACE	KB	WITH	W/
KIP	K	WOOD	WD
		WORKING POINT	WP
LAMINATED VENEER LUMBER	LVL		
LIGHT	LT	X-BRACING	X-BR
LIVE LOAD	LL		
LOCATION	LOC		

Fletcher::
Architects, Inc.

ARCHITECTURE ■ PLANNING ■ INTERIORS
1906 NORTH SIGNAL HILLS DRIVE
KIRKWOOD, MO. 63122
TEL. (314) 965-6333
FAX. (314) 965-8997
info@fletcher-architects.com

CONSULTANTS

CIVIL ENGINEER:
FRONTENAC ENGR. GROUP, INC.
16 SUNNEN DR.
ST. LOUIS, MO 63143
PHONE (314) 644-2200
FAX (314) 644-0645

STRUCT. ENGINEER:
ABS CONSULTING
1944 LACKLAND HILLS PARKWAY
ST. LOUIS, MO 63146
PHONE (314) 994-7007
FAX (314) 994-0732

M.E.P. ENGINEER:
SSC ENGINEERING
650 SPIRIT OF ST. LOUIS BLVD.
CHESTERFIELD, MO 63005
PHONE (636) 530-7770
FAX (636) 530-7877

HARDWARE CONSULTANT
8710
JESS PIERRE CT.
ST. LOUIS, MO 63128
PHONE (314) 487-7776
FAX (314) 849-2343

KITCHEN CONSULTANTS
THE GEIGER GROUP
3501 WATSON ROAD
ST. LOUIS, MO 63139
PHONE (314) 645-2987
FAX (314) 645-3205

LANDSCAPE ARCHITECT
AUSTIN TAO AND ASSOC.
2101 LOCUST, 2ND. FLOOR
ST. LOUIS, MO 63103
PHONE (314) 436-2999
FAX (314) 436-9130

INTERIOR DESIGN
O'TOOLE DESIGN ASSOC.
134 WEST JEFFERSON
KIRKWOOD, MO 63122
PHONE (314) 909-1906
FAX (314) 909-1906

PROJECT:
ADDITION AND RENOVATIONS TO
McKnight Road
Church of Christ
2515 SOUTH MCKNIGHT ROAD
ST. LOUIS, MO 63124

The Professional Engineer whose personal seal and signature appears on this page assumes responsibility only for what appears on this page and disclaims (pursuant to Section 327.411 RSMo) any responsibility for all other pages, plans, specifications, estimates, reports, or other documents or instruments not sealed by this Professional Engineer relating to, or intended to be used for, any part of parts of the engineering project to which this page refers.

© 2002 BY ABSG CONSULTING

NO	DATE	REVISIONS

PROJECT NO. 01403
DRAWN BY: PWM
CHECKED BY: JNR
DATE: NOVEMBER 1, 2002

SHEET NO. S1.0

CONSTRUCTION/BID DRAWINGS

K:\DWG\1078965 McKnightRd Church\965s1_0.dwg, 11/01/02 08:45:31 AM, pmarshall, ABS CONSULTING (EQE)

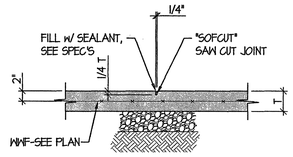

TYPICAL SLAB ON GRADE CONTROL JOINT DETAIL — 1 / S1.1
N.T.S.

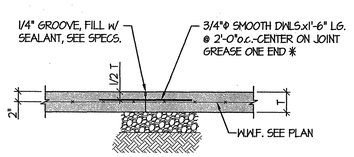

* - SPEED DOWELS MAY BE USED IN LIEU OF GREASE

TYPICAL SLAB ON GRADE CONSTRUCTION JOINT DETAIL — 2 / S1.1
N.T.S.

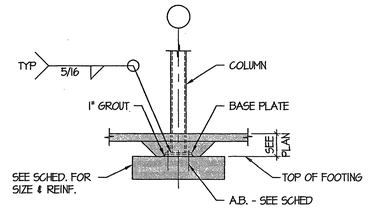

TYPICAL INTERIOR COLUMN DETAIL — 3 / S1.1
NTS

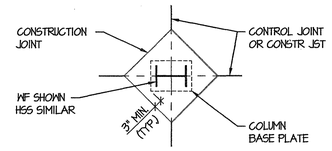

TYPICAL CJ PLAN @ COLUMN — 4 / S1.1
NTS

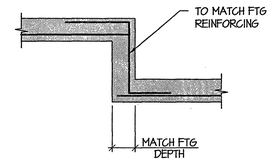

TYPICAL FOOTING STEP — 5 / S1.1
NTS

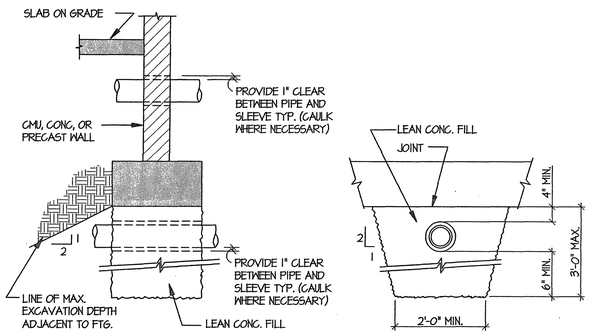

TYPICAL PIPE @ FOUNDATION DETAIL — 6 / S1.1
NTS

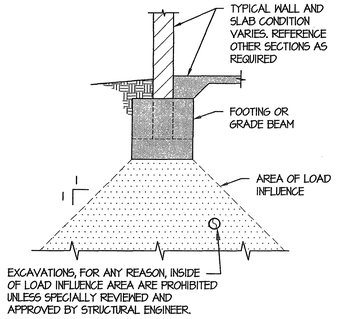

PERMITTED EXCAVATIONS AT LOAD BEARING FOUNDATION — 7 / S1.1
NTS

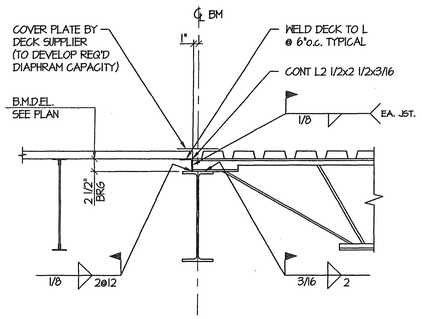

TYPICAL DECK SUPPORT AT CHANGE OF DIRECTION — 8 / S2.2
SCALE: 1"=1'-0"

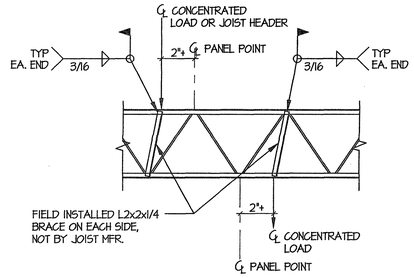

TYP. JOIST REINFORCEMENT @ CONCENTRATED LOADS — 9 / S1.1
NTS

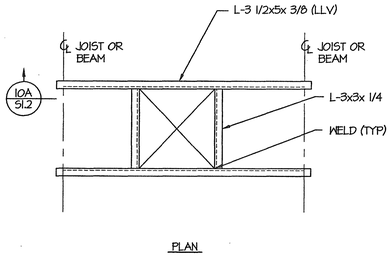

PLAN

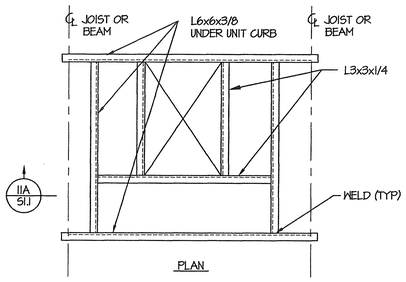

PLAN

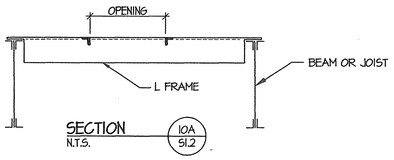

SECTION — 10A / S1.2
N.T.S.

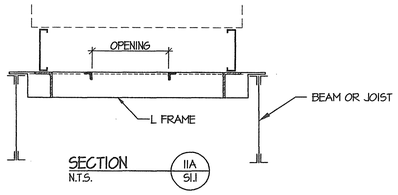

SECTION — 11A / S1.1
N.T.S.

TYPICAL OPENING DETAIL — 10 / S1.1
COORDINATE SIZE & LOCATION OF OPNG WITH ARCH & MECH. DWGS.

TYPICAL RTU CURB SUPPORT DETAIL — 11 / S1.1
COORDINATE SIZE & LOCATION OF FRAME WITH ARCH. & MECH. DWGS.

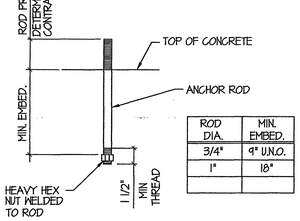

ROD DIA.	MIN. EMBED.
3/4"	9" U.N.O.
1"	18"

TYPICAL ANCHOR ROD DETAIL U.N.O. — 12 / S1.1
NTS

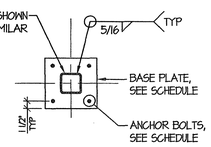

TYPICAL BASE PLATE DETAIL U.N.O. — 13 / S3.0
NTS

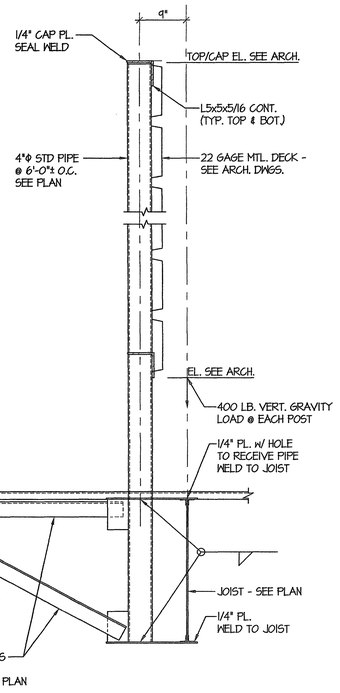

TYP. RTU SCREEN SUPPORT — 17 / S1.1
NTS

BEAM DEPTH	NO. OF ROWS OF BOLTS
8" OR 10"	2
12" OR 14"	3
16"	4
18"	5
21"	6
24"	7
27"	8
30"	9

THIS DETAIL SHOWS MINIMUM GUIDELINES FOR THIS CONNECTION TYPE. CONTRACTOR SHALL DESIGN CONNECTIONS FOR LOADS BASED UPON AISC SPAN-LOAD TABLES. INCREASE SIZES OF CONNECTION ELEMENTS SHOWN IF REQUIRED TO SATISFY LOAD REQUIREMENTS.

TYPICAL BEAM CONNECTION TO HSS COLUMN — 14 / S1.1
NTS

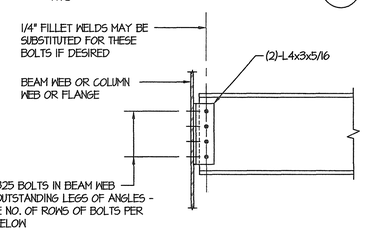

BEAM DEPTH	NO. OF ROWS OF BOLTS
8" OR 10"	2
12" OR 14"	3
16"	4
18"	5
21"	6
24"	7
27"	8
30"	9

THIS DETAIL SHOWS MINIMUM GUIDELINES FOR THIS CONNECTION TYPE. CONTRACTOR SHALL DESIGN CONNECTIONS FOR LOADS BASED UPON AISC SPAN-LOAD TABLES. INCREASE SIZES OF CONNECTION ELEMENTS SHOWN IF REQUIRED TO SATISFY LOAD REQUIREMENTS.

TYPICAL BEAM CONNECTION — 18 / S1.1
NTS

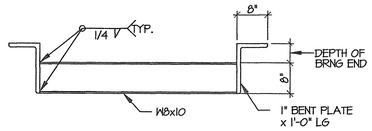

TYPICAL JOIST HEADER DETAIL — 15 / S1.1
NTS

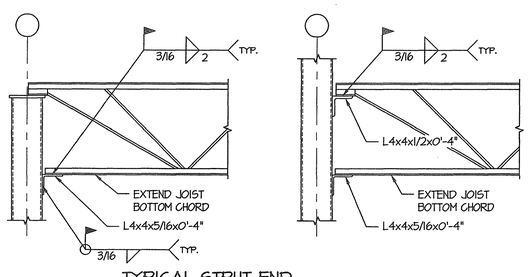

TYPICAL STRUT END JOIST DETAILS — 16 / S1.1
NTS

Fletcher:: Architects, Inc.
ARCHITECTURE ■ PLANNING ■ INTERIORS
1906 NORTH SIGNAL HILLS DRIVE
KIRKWOOD, MO. 63122
TEL. (314) 965-6333
FAX. (314) 965-8997
info@fletcher-architects.com

CONSULTANTS

CIVIL ENGINEER:
FRONTENAC ENGR. GROUP, INC.
19 SUNNEN DR.
ST. LOUIS, MO 63143
PHONE (314) 644-2200
FAX (314) 644-0645

STRUCT. ENGINEER:
ABS CONSULTING
1644 LACKLAND HILLS PARKWAY
ST. LOUIS, MO 63146
PHONE (314) 994-7007
FAX (314) 994-0732

M.E.P. ENGINEER:
SSC ENGINEERING
560 SPIRIT OF ST. LOUIS BLVD.
CHESTERFIELD, MO 63005
PHONE (636) 530-7770
FAX (636) 530-7877

HARDWARE CONSULTANT
8710
8505 PIERRE CT.
ST. LOUIS, MO 63128
PHONE (314) 487-7770
FAX (314) 543-2343

KITCHEN CONSULTANTS
THE GEIGER GROUP
3501 WATSON ROAD
ST. LOUIS, MO 63139
PHONE (314) 645-2987
FAX (314) 645-3208

LANDSCAPE ARCHITECT
AUSTIN TAO, AND ASSOC.
2101 LOCUST, 2ND. FLOOR
ST. LOUIS, MO 63103
PHONE (314) 436-2099
FAX (314) 436-9130

INTERIOR DESIGN
OTOOLE DESIGN ASSOC.
124 WEST JEFFERSON
KIRKWOOD, MO 63122
PHONE (314) 909-1906
FAX (314) 909-1906

PROJECT:
ADDITION AND RENOVATIONS TO
McKnight Road
Church of Christ
2515 SOUTH MCKNIGHT ROAD
ST. LOUIS, MO 63124

The Professional Engineer whose personal seal and signature appears on this page assumes responsibility only for what appears on this page and discipline (pursuant to Section 327.411 RSMo) any responsibility for all other pages, plans, specifications, estimates, reports, or other documents or instruments not sealed by this Professional Engineer relating to, or intended to be used for, any part of parts of the engineering project to which this page relates.

© 2002 BY ABSG CONSULTING

NO	DATE	REVISIONS

PROJECT NO. 01403
SHEET NO. S1.1
DRAWN BY: PWM
CHECKED BY: JNR
DATE: NOVEMBER 1, 2002

CONSTRUCTION/BID DRAWINGS

K:\DWG\1079865 McKnightRd Church\9658t_1.dwg, 11/01/02 08:16:19 AM, pmarshall, ABS CONSULTING (EQE)

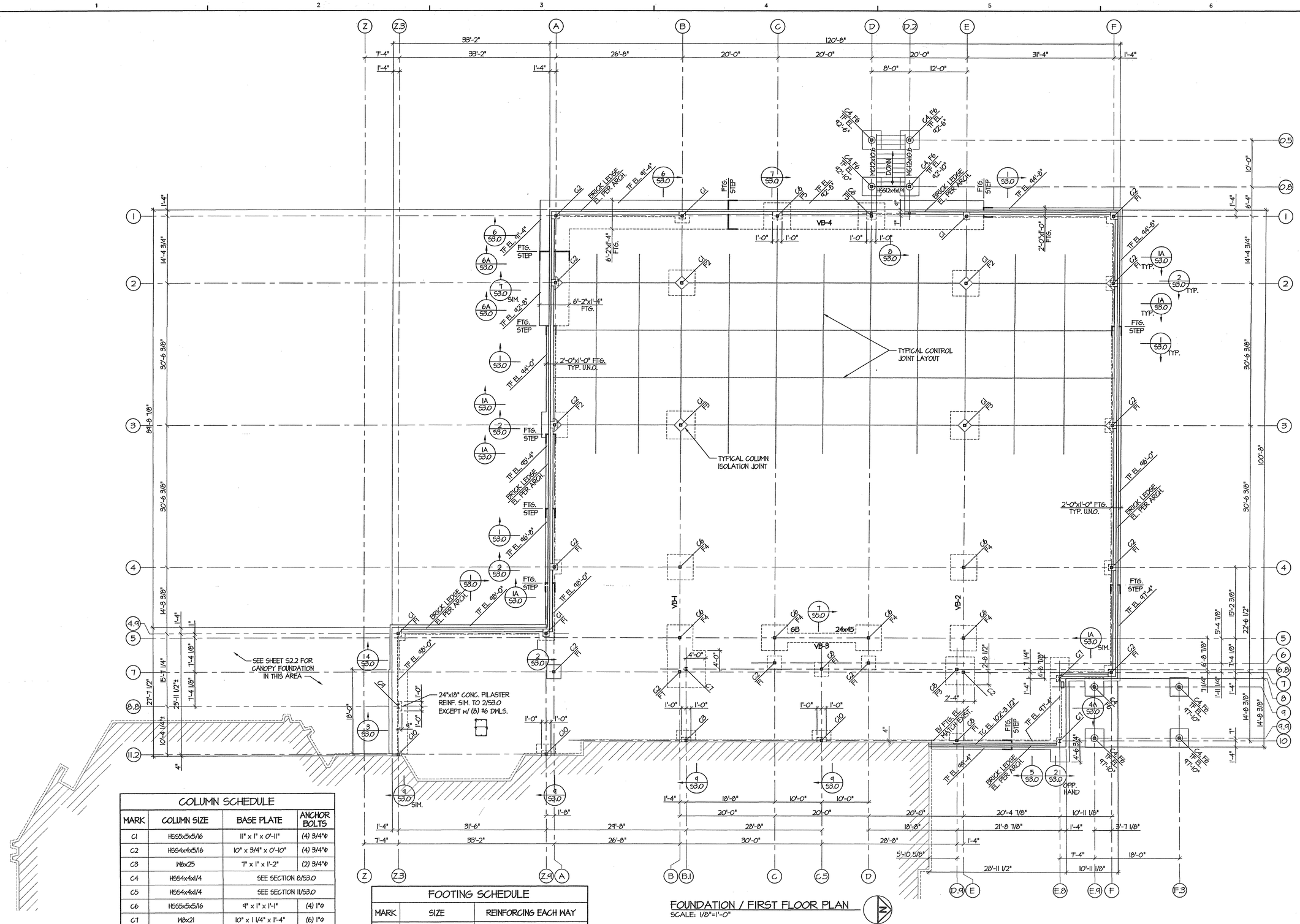

COLUMN SCHEDULE

MARK	COLUMN SIZE	BASE PLATE	ANCHOR BOLTS
C1	HSS5x5x5/16	11" x 1" x 0'-11"	(4) 3/4"Φ
C2	HSS4x4x5/16	10" x 3/4" x 0'-10"	(4) 3/4"Φ
C3	W6x25	7" x 1" x 1'-2"	(2) 3/4"Φ
C4	HSS4x4x1/4	SEE SECTION 8/S3.0	
C5	HSS4x4x1/4	SEE SECTION 11/S3.0	
C6	HSS5x5x5/16	9" x 1" x 1'-1"	(4) 1"Φ
C7	W8x21	10" x 1 1/4" x 1'-4"	(6) 1"Φ
C8	HSS4x4x3/8	10" x 3/4" x 0'-10"	(4) 3/4"Φ
C9	W10x30	10" x 1 3/4" x 1'-7"	(6) 1"Φ
C10	HSS5x5x5/16	7" x 1" x 1'-2"	(2) 3/4"Φ

NOTES
1) ALL BASE PL's SHALL BE ON 1" NON-SHRINK GROUT.
2) SEE SHEET S1.1 FOR TYPICAL DETAILS, U.N.O..

FOOTING SCHEDULE

MARK	SIZE	REINFORCING EACH WAY
F1	3'-0"x3'-0"x1'-0"	(8) #4 @ BOTTOM
F2	5'-6"x5'-6"x1'-2"	(6) #5 @ BOTTOM
F3	6'-0"x6'-0"x1'-2"	(7) #5 @ BOTTOM
F4	5'-6"x5'-6"x3'-4"	(10) #5 @ BOTTOM
F5	5'-8"x5'-8"x2'-0"	(10) #5 @ BOTTOM
F6	4'-0"x4'-0"x1'-6"	SEE SECTION 8/S3.0
F7	8'-0"x8'-0"x2'-0"	(8) #5 @ TOP & BOTTOM

FOUNDATION / FIRST FLOOR PLAN
SCALE: 1/8"=1'-0"

NOTES:
1. FINISHED FLOOR ELEVATION = 100'-0" (TO MATCH EXISTING).
2. FLOOR CONST.: 4" CONCRETE SLAB ON GRADE REINFORCED w/ 6x6-W1.4xW1.4 WWF UNDERLAIN BY 6 MIL. VAPOR BARRIER OVER 4" GRANULAR SUBGRADE, OVER 12" COMPACTED ENGINEERED FILL, MIN.
3. TOP OF INTERIOR FOOTING EL. = 99'-4" U.N.O.
4. SPREAD FOOTING ARE CENTERED ON COLUMN GRIDS AND / OR WALLS U.N.O.
5. VB INDICATES VERTICAL BRACE BAY LOCATION.

THE EXISTING DIMENSIONS AND ELEVATIONS SHOWN ARE **NOT** AS-BUILT DIMENSIONS BUT WERE OBTAINED FROM THE ORIGINAL STRUCTURAL DRAWINGS AND OTHER DRAWINGS AND DOCUMENTS. IT IS THE RESPONSIBILITY OF CONTRACTOR TO **FIELD VERIFY** ALL DIMENSIONS, ELEVATIONS AS REQUIRED PRIOR TO BEGINNING CONSTRUCTION, FABRICATION, ETC.

Fletcher:: Architects, Inc.

ARCHITECTURE ■ PLANNING ■ INTERIORS
1906 NORTH SIGNAL HILLS DRIVE
KIRKWOOD, MO. 63122
TEL (314) 965-6333
FAX (314) 965-8997
info@fletcher-architects.com

CONSULTANTS

CIVIL ENGINEER:
FRONTENAC ENGR. GROUP, INC.
16 SUNNEN DR.
ST. LOUIS, MO 63143
PHONE (314) 644-2200
FAX (314) 644-0645

STRUCT. ENGINEER:
ABS CONSULTING
1044 LACKLAND HILLS PARKWAY
ST. LOUIS, MO 63146
PHONE (314) 994-7007
FAX (314) 994-0722

M.E.P. ENGINEER:
SSC ENGINEERING
650 SPIRIT OF ST. LOUIS BLVD.
CHESTERFIELD, MO 63006
PHONE (636) 530-7770
FAX (636) 530-7677

HARDWARE CONSULTANT
5710
8564 PIERRE CT.
ST. LOUIS, MO 63128
PHONE (314) 487-7776
FAX (314) 842-5242

KITCHEN CONSULTANTS
THE GEIGER GROUP
3601 WATSON ROAD
ST. LOUIS, MO 63139
PHONE (314) 645-2987
FAX (314) 645-3208

LANDSCAPE ARCHITECT
AUSTIN TAO, AND ASSOC.
2101 LOCUST, 2ND. FLOOR
ST. LOUIS, MO 63103
PHONE (314) 436-2999
FAX (314) 436-9120

INTERIOR DESIGN
OTOOLE DESIGN ASSOC.
126 WEST JEFFERSON
KIRKWOOD, MO 63122
PHONE (314) 909-1906
FAX (314) 909-1906

PROJECT:
ADDITION AND RENOVATIONS TO
McKnight Road Church of Christ
2515 SOUTH MCKNIGHT ROAD
ST. LOUIS, MO 63124

The Professional Engineer whose personal seal and signature appears on this page assumes responsibility only for what appears on this page and disclaims (pursuant to Section 327.411 RSMo) any responsibility for all other pages, plans, specifications, estimates, reports, or other documents or instruments not sealed by this Professional Engineer relating to, or intended to be used for, any part of parts of the engineering project to which this page refers.

© 2002 BY ABSG CONSULTING

NO	DATE	REVISIONS

PROJECT NO. 01403
DRAWN BY: PWN
CHECKED BY: JNR
DATE: NOVEMBER 1, 2002

SHEET NO. **S2.0**

CONSTRUCTION/BID DRAWINGS

K:\DWG\1079903 McKnightRd Church\9658_0.dwg, 11/01/02 08:16:55 AM, pmarshall, ABS CONSULTING (EQE)

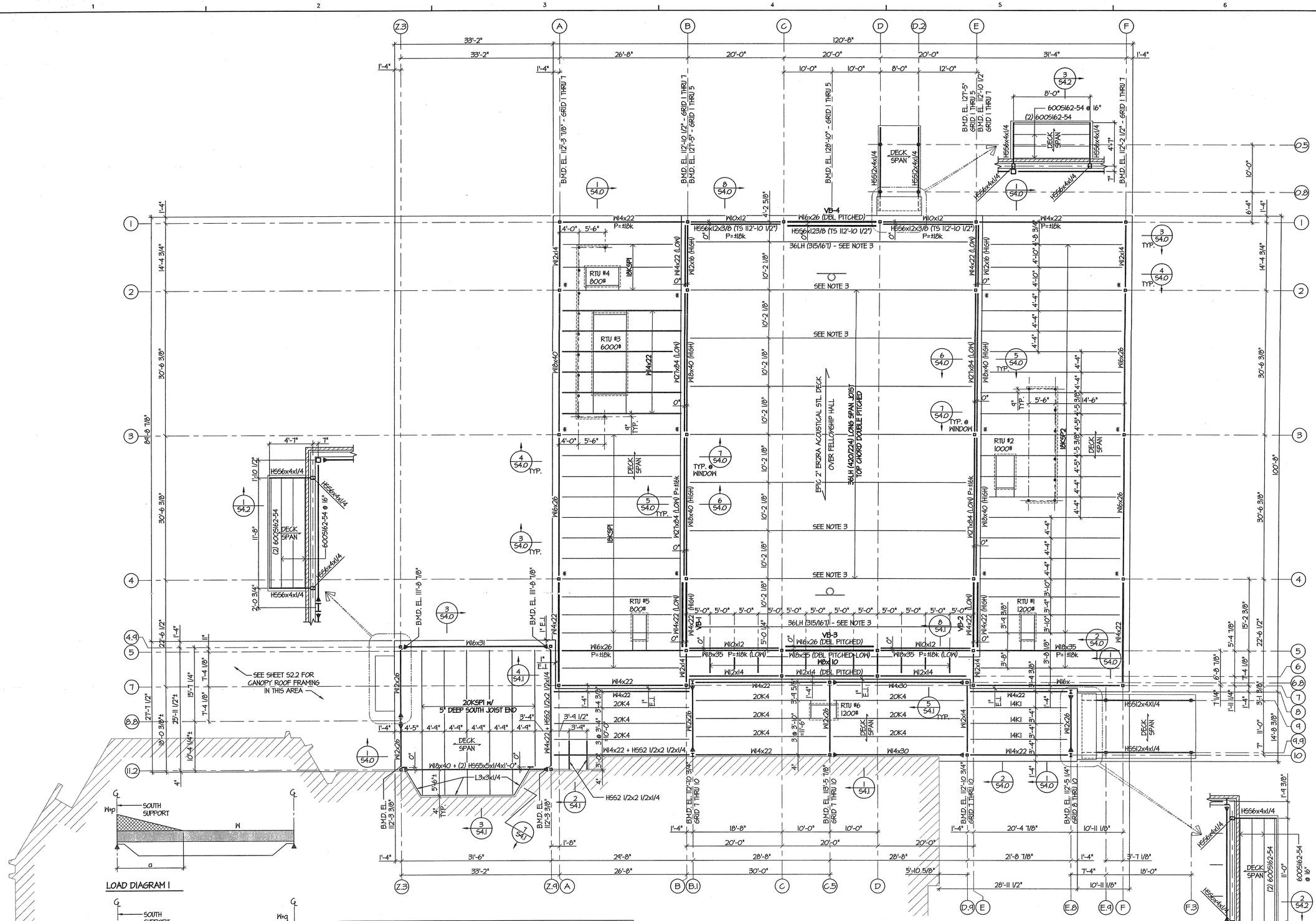
Z.3
A
B
C
D
D.2
E
F
33'-2"
120'-8"
26'-8"
20'-0"
31'-4"
1'-4"
10'-0"
8'-0"
12'-0"
B.M.D. EL. 112'-3 7/8" - GRID 1 THRU 7
B.M.D. EL. 112'-10 1/2" - GRID 1 THRU 5
B.M.D. EL. 121'-5" - GRID 1 THRU 7
B.M.D. EL. 128'-10" - GRID 1 THRU 5
B.M.D. EL. 121'-5" GRID 1 THRU 5
B.M.D. EL. 112'-10 1/2" GRID 1 THRU 7
B.M.D. EL. 112'-2 1/2" - GRID 1 THRU 7
W14x22 P=±18k
W10x12
W16x26 (DBL PITCHED)
VB-4
HSS6x12x3/8 (TS 112"-10 1/2") P=±18k
HSS6x23/8 (TS 112"-10 1/2")
36LH (315/161) - SEE NOTE 3
SEE NOTE 3
RTU #4 800#
RTU #3 6000#
RTU #2 1000#
RTU #5 800#
RTU #1 1200#
RTU #6 1200#
18KSP1
18KSP2
20KSP1
DECK SPAN
W14x22 (LOW)
W16x40 (HIGH)
W21x84 (LOW) P=±16k
W16x26
W18x40
W12x14
W16x31
W16x35 P=±18k (LOW)
W16x35 (DBL PITCHED-LOW)
W18x35 P=±18k
W14x30
W14x22 + HSS2 1/2x2 1/2x1/4
W18x40 + (2) HSS5x5x1/4x1'-0"
L3x3x1/4
HSS6x4x1/4
HSS12x4x1/4
6005162-54 @ 16"
(2) 6005162-54
EPDG 2" ECORA ACOUSTICAL STL. DECK OVER FELLOWSHIP HALL
36LH (420/224) LONG SPAN JOIST TOP CHORD DOUBLE PITCHED
SEE SHEET S2.2 FOR CANOPY ROOF FRAMING IN THIS AREA
20KSP1 w/ 5" DEEP SOUTH JOIST END
TYP. @ WINDOW
TYP.
T.O.
141-4 3/4"
30'-6 3/8"
84'-8 7/8"
100'-8"
101'-0"
6'-4"
22'-6 1/2"
15'-2 3/8"
5'-4 1/8"
7'-4 1/8"
11'-0"
14'-8 3/8"
27'-7 1/2"
25'-11 1/2"
18'-0 3/8"
10'-4 1/4"
15'-7 1/4"
7'-1 1/4"
6'-8 7/8"
7'-11 1/4"
3'-1 3/8"
11'-8"
2'-0 3/4"
1'-10 1/2"
4'-7"
7"
5'-6"
14'-6"
4'-4"
4'-10"
3'-10"
3'-9"
3'-8"
3'-4 3/8"
3'-4 5/8"
3'-3 1/8"
3'-1 1/2"
3'-4"
4'-5"
4'-9"
4'-1"
5'-0"
5'-0 1/4"
5'-1 3/8"
4'-5 3/8"
4'-5 1/2"
4'-5 3/8"
4'-5

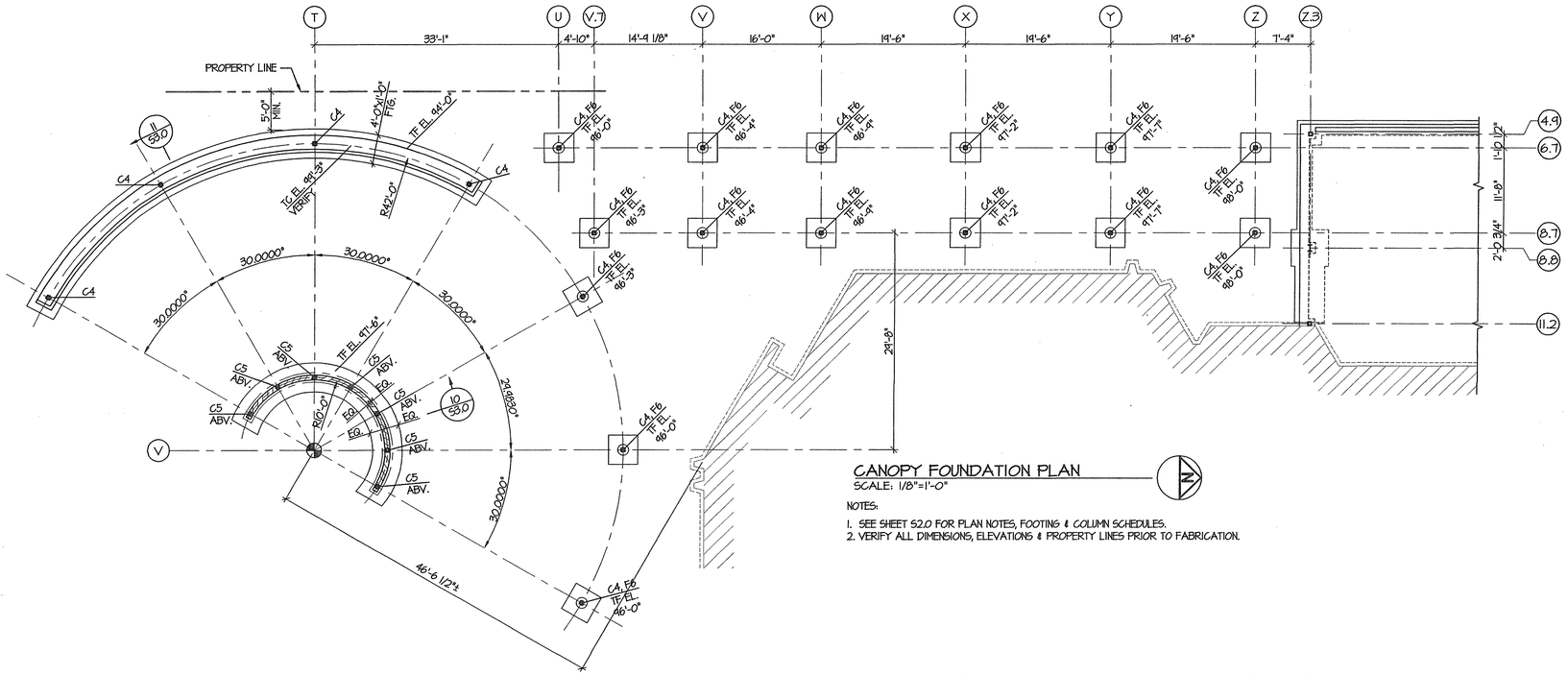

CANOPY FOUNDATION PLAN
SCALE: 1/8"=1'-0"

NOTES:

1. SEE SHEET S2.0 FOR PLAN NOTES, FOOTING & COLUMN SCHEDULES.
2. VERIFY ALL DIMENSIONS, ELEVATIONS & PROPERTY LINES PRIOR TO FABRICATION.

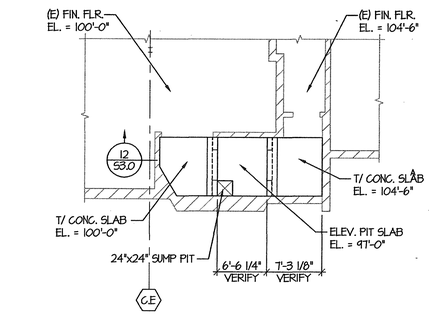

PARTIAL EXISTING FOUNDATION PLAN
SCALE: 1/8"=1'-0"

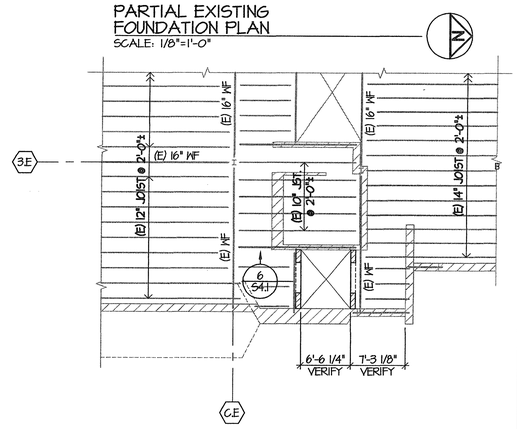

PARTIAL EXIST. SECOND FLOOR FRAMING PLAN
SCALE: 1/8"=1'-0"

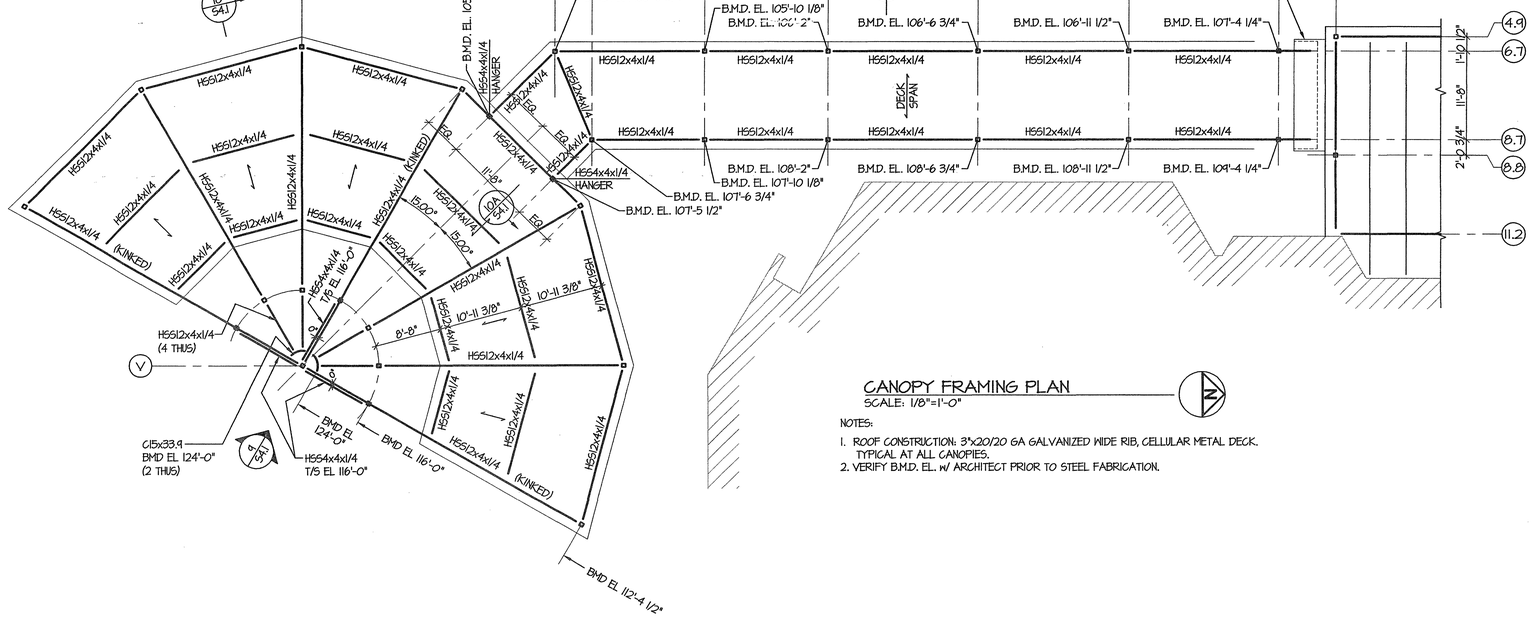

CANOPY FRAMING PLAN
SCALE: 1/8"=1'-0"

NOTES:

1. ROOF CONSTRUCTION: 3"x20/20 GA GALVANIZED WIDE RIB, CELLULAR METAL DECK. TYPICAL AT ALL CANOPIES.
2. VERIFY B.M.D. EL. w/ ARCHITECT PRIOR TO STEEL FABRICATION.



PARTIAL EXISTING ROOF FRAMING PLAN
SCALE: 1/8"=1'-0"

THE EXISTING DIMENSIONS AND ELEVATIONS SHOWN ARE **NOT** AS-BUILT DIMENSIONS BUT WERE OBTAINED FROM THE ORIGINAL STRUCTURAL DRAWINGS AND OTHER DRAWINGS AND DOCUMENTS. IT IS THE RESPONSIBILITY OF CONTRACTOR TO **FIELD VERIFY** ALL DIMENSIONS, ELEVATIONS AS REQUIRED PRIOR TO BEGINNING CONSTRUCTION, FABRICATION, ETC.

Fletcher:: Architects, Inc.

ARCHITECTURE ■ PLANNING ■ INTERIORS
1906 NORTH SIGNAL HILLS DRIVE
KIRKWOOD, MO. 63122
TEL. (314) 965-6333
FAX. (314) 965-8997
info@fletcher-architects.com

CONSULTANTS

CIVIL ENGINEER:
FRONTENAC ENGR. GROUP, INC.
18 SUNNEN DR.
ST. LOUIS, MO 63143
PHONE (314) 644-2200
FAX (314) 644-0845

STRUCT. ENGINEER:
ABS CONSULTING
1644 LACKLAND HILLS PARKWAY
ST. LOUIS, MO 63146
PHONE (314) 994-7007
FAX (314) 994-0722

M.E.P. ENGINEER:
SSC ENGINEERING
550 SPIRIT OF ST. LOUIS BLVD.
CHESTERFIELD, MO 63005
PHONE (636) 530-7770
FAX (636) 530-7877

HARDWARE CONSULTANT
STO
5555 PIERRE CT.
ST. LOUIS, MO 63128
PHONE (314) 487-7776
FAX (314) 842-2343

KITCHEN CONSULTANTS
THE GEIGER GROUP
3501 WATSON ROAD
ST. LOUIS, MO 63139
PHONE (314) 645-2987
FAX (314) 645-3208

LANDSCAPE ARCHITECT
AUSTIN TAO, AND ASSOC.
2101 LOCUST, 2ND. FLOOR
ST. LOUIS, MO 63103
PHONE (314) 436-2099
FAX (314) 436-2130

INTERIOR DESIGN
OTOOLE DESIGN ASSOC.
124 WEST JEFFERSON
KIRKWOOD, MO 63122
PHONE (314) 909-1005
FAX (314) 909-1006

PROJECT:
ADDITION AND RENOVATIONS TO
McKnight Road Church of Christ
2515 SOUTH MCKNIGHT ROAD
ST. LOUIS, MO 63124

The Professional Engineer whose personal seal and signature appears on this page assumes responsibility only for what appears on this page and disclaims (pursuant to Section 327.411 RSMo) any responsibility for all other pages, plans, specifications, estimates, reports, or other documents or instruments not sealed by this Professional Engineer relating to, or intended to be used for, any part of parts of the engineering project to which this page refers.

© 2002 BY ABSG CONSULTING

NO	DATE	REVISIONS

PROJECT NO. 01403
DRAWN BY: PWM
CHECKED BY: JNR
DATE: NOVEMBER 1, 2002

SHEET NO. **S2.2**

CONSTRUCTION/BID DRAWINGS

K:\DWG\1079965 McKnightRd Church\1965s2_2.dwg, 11/01/02 08:50:43 AM, pmarshall, ABS CONSULTING (EQ2)

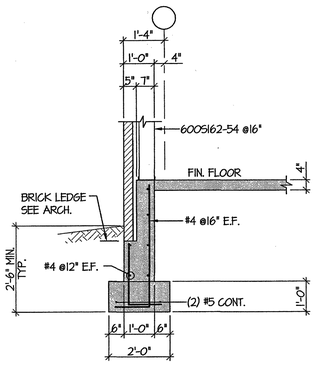

SECTION 1 53.0
SCALE: 1/2"=1'-0"

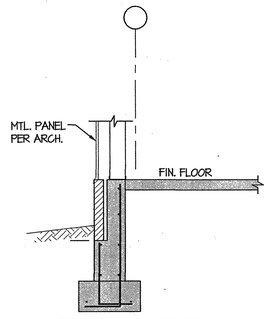

SECTION 1A 53.0
SCALE: 1/2"=1'-0"

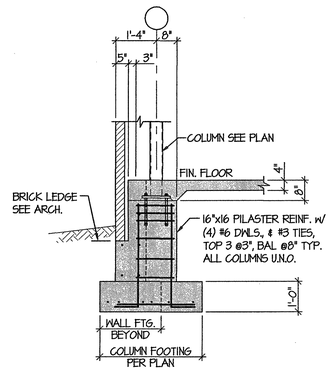

SECTION 2 53.0
SCALE: 1/2"=1'-0"

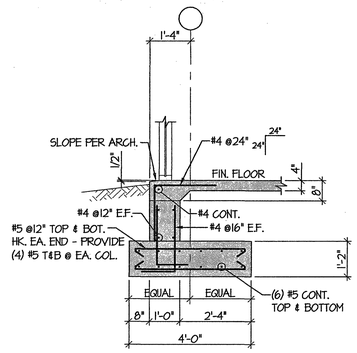

SECTION 3 53.0
SCALE: 1/2"=1'-0"

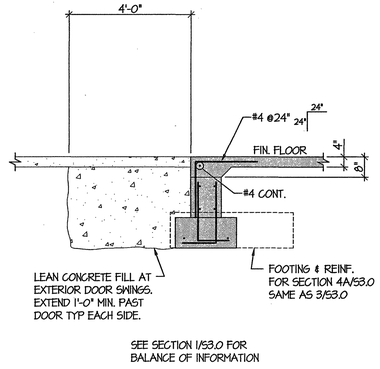

SECTION 4 53.0 | 4A 53.0
SCALE: 1/2"=1'-0"

SEE SECTION 1/S3.0 FOR
BALANCE OF INFORMATION

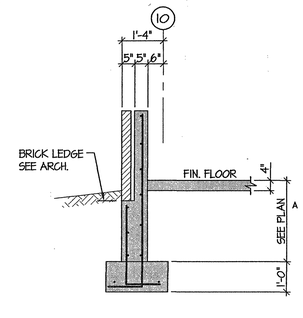

SECTION 5 53.0
SCALE: 1/2"=1'-0"

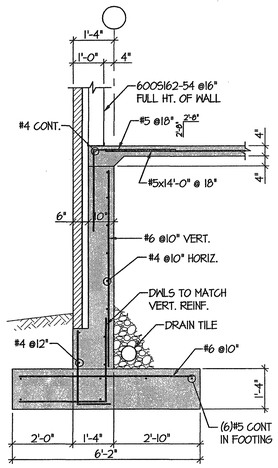

SECTION 6 53.0
SCALE: 1/2"=1'-0"

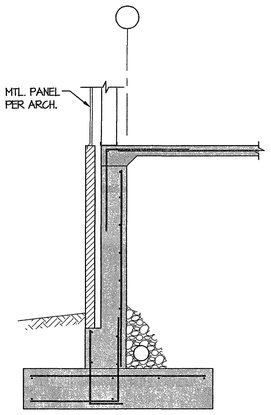

SECTION 6A 53.0
SCALE: 1/2"=1'-0"

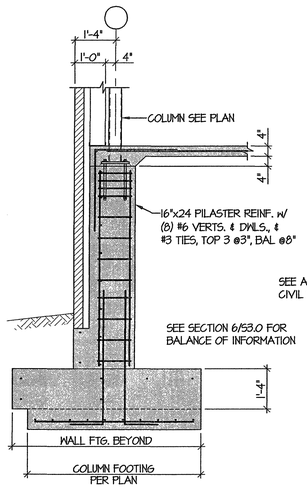

SECTION 7 53.0
SCALE: 1/2"=1'-0"

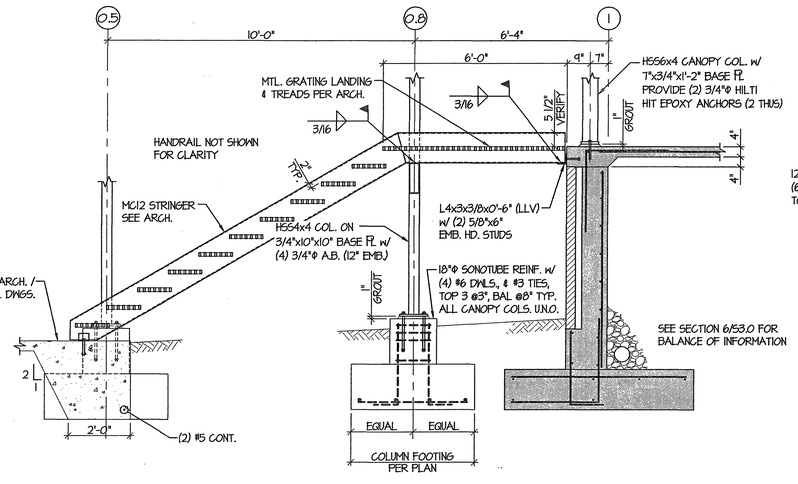

SECTION 8 53.0
SCALE: 1/2"=1'-0"

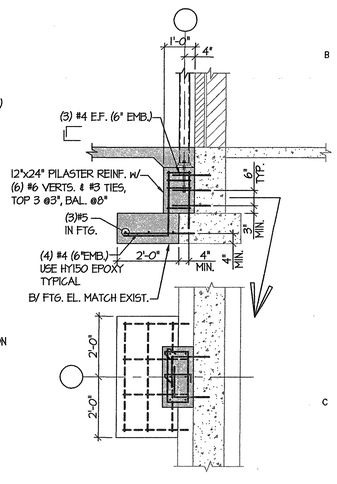

SECTION 9 53.0
SCALE: 1/2"=1'-0"

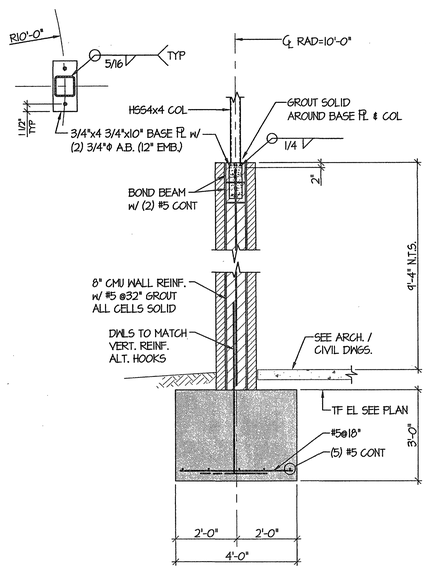

SECTION 10 53.0
SCALE: 1/2"=1'-0"

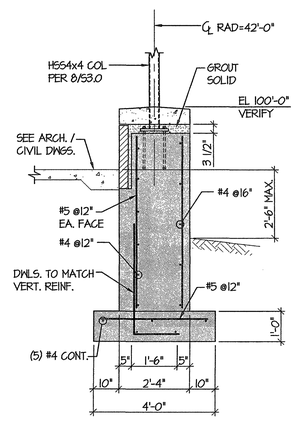

SECTION 11 53.0
SCALE: 1/2"=1'-0"

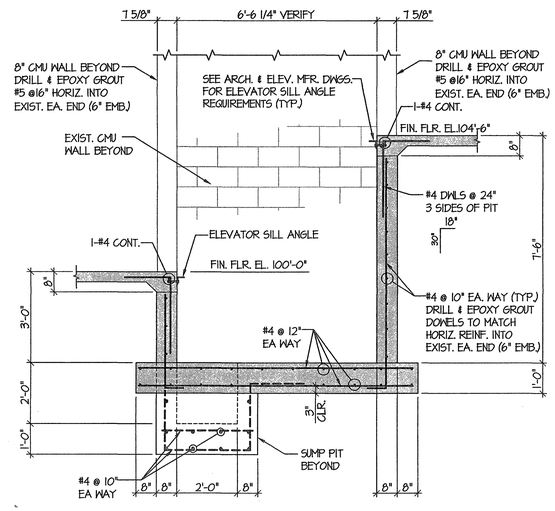

SECTION 12 53.0
SCALE: 1/2"=1'-0"

Fletcher::
Architects, Inc.

ARCHITECTURE ■ PLANNING ■ INTERIORS
1906 NORTH SIGNAL HILLS DRIVE
KIRKWOOD, MO. 63122
TEL. (314) 965-6333
FAX. (314) 965-8997
info@fletcher-architects.com

CONSULTANTS

CIVIL ENGINEER:
FRONTENAC ENGR. GROUP, INC.
18 SUNNEN DR.
ST. LOUIS, MO 63143
PHONE (314) 644-2200
FAX (314) 644-0445

STRUCT. ENGINEER:
ABS CONSULTING
1244 LACKLAND HILLS PARKWAY
ST. LOUIS, MO 63146
PHONE (314) 994-7007
FAX (314) 994-0752

M.E.P. ENGINEER:
SSC ENGINEERING
550 SPIRIT OF ST. LOUIS BLVD.
CHESTERFIELD, MO 63005
PHONE (636) 530-7770
FAX (636) 530-7677

HARDWARE CONSULTANT
#710
5858 PIERRE CT.
ST. LOUIS, MO 63128
PHONE (314) 487-7776
FAX (314) 845-2343

KITCHEN CONSULTANTS
THE DEDIER GROUP
3201 WATSON ROAD
ST. LOUIS, MO 63139
PHONE (314) 645-2687
FAX (314) 645-3208

LANDSCAPE ARCHITECT
AUSTIN TAO AND ASSOC.
2101 LOCUST, 2ND. FLOOR
ST. LOUIS, MO 63103
PHONE (314) 436-3599
FAX (314) 436-9130

INTERIOR DESIGN
O'TOOLE DESIGN ASSOC.
134 WEST JEFFERSON
KIRKWOOD, MO. 63122
PHONE (314) 909-1905
FAX (314) 909-1906

PROJECT:
ADDITION AND RENOVATIONS TO
McKnight Road Church of Christ
2515 SOUTH MCKNIGHT ROAD
ST. LOUIS, MO 63124

The Professional Engineer whose personal seal and signature appears on this page assumes responsibility only for what appears on this page and disclaims (pursuant to Section 327.411 RSMo) any responsibility for all other pages, plans, specifications, estimates, reports, or other documents or instruments not sealed by this Professional Engineer relating to, or intended to be used for, any part of parts of the engineering project to which this page relates.

© 2002 BY ABSG CONSULTING

NO	DATE	REVISIONS

PROJECT NO. 01403
DRAWN BY: PWM
CHECKED BY: JNR
DATE: NOVEMBER 1, 2002

SHEET NO. S3.0

CONSTRUCTION/BID DRAWINGS

K:\DWG\1079865 McKnightRd Church\965e3_0.dwg, 11/01/02 08:51:20 AM, pmarshall, ABS CONSULTING (EQE)

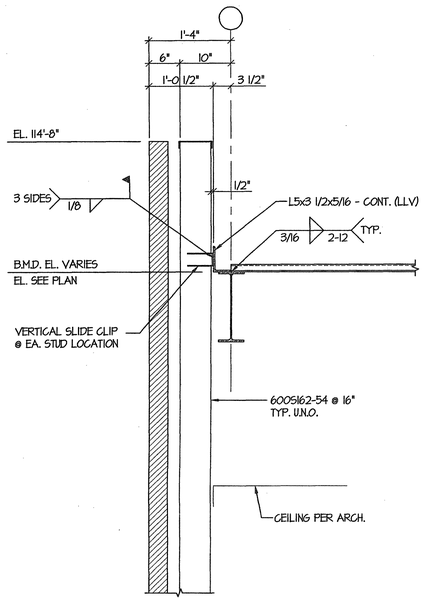

SECTION 1/S4.0
SCALE: 1"=1'-0"

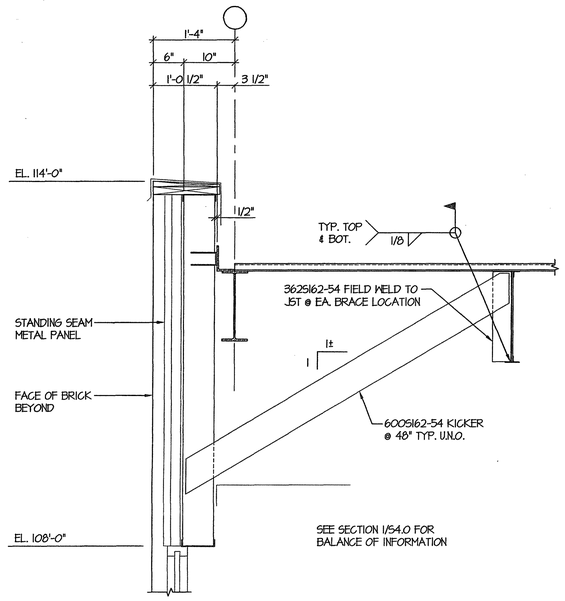

SECTION 2/S4.0
SCALE: 1"=1'-0"

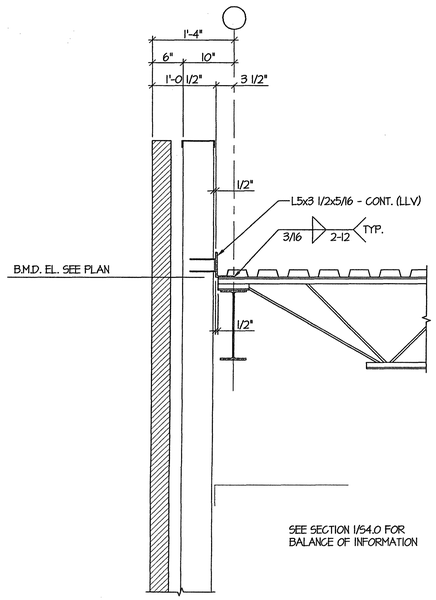

SECTION 3/S4.0
SCALE: 1"=1'-0"

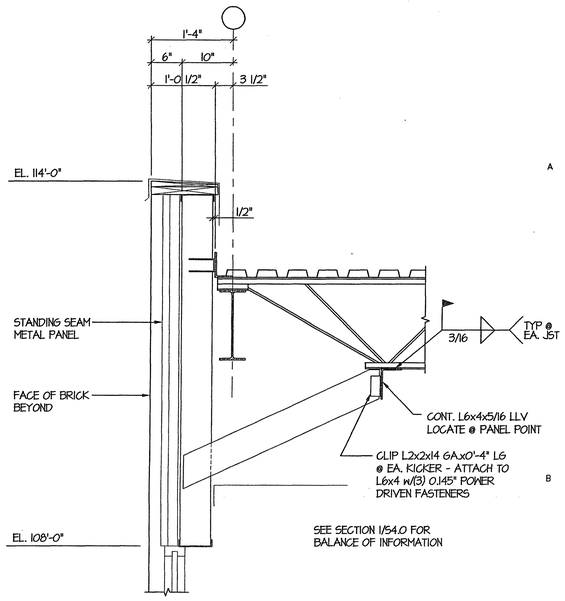

SECTION 4/S4.0
SCALE: 1"=1'-0"

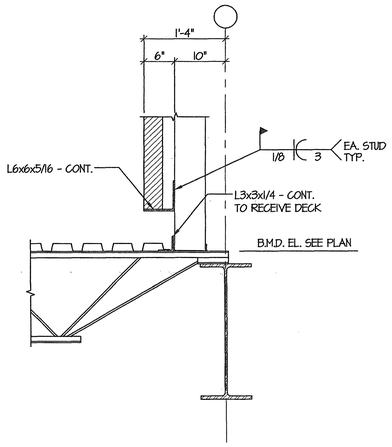

SECTION 5/S4.0
SCALE: 1"=1'-0"

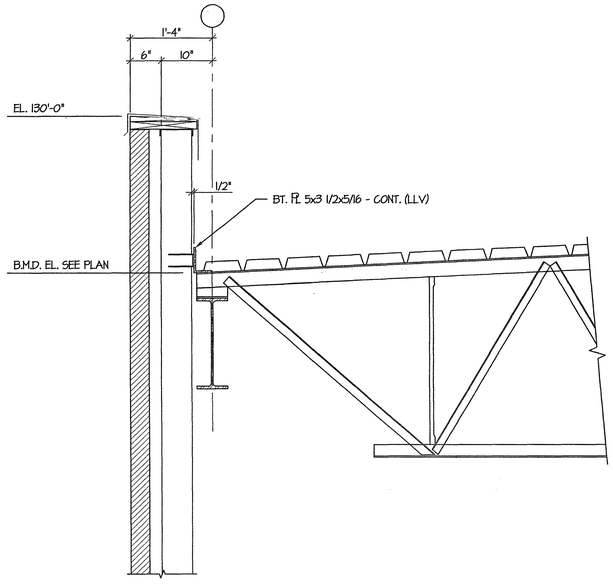

SECTION 6/S4.0
SCALE: 1"=1'-0"

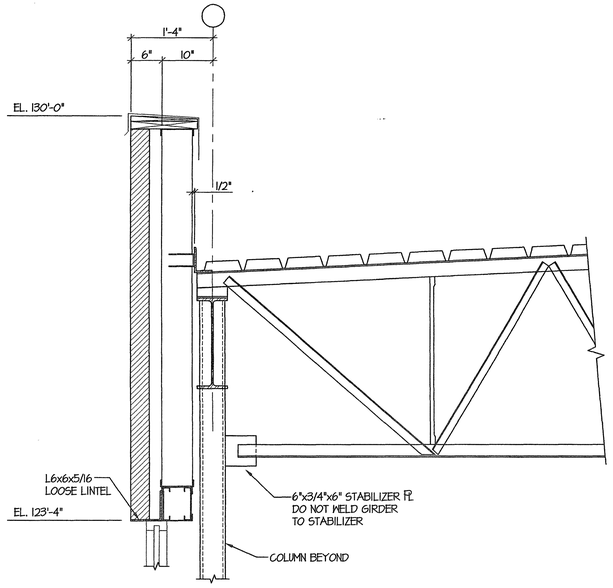

SECTION 7/S4.0
SCALE: 1"=1'-0"

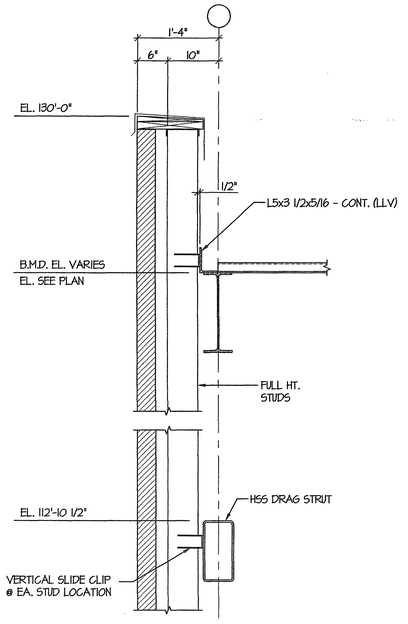

SECTION 8/S4.0
SCALE: 1"=1'-0"

Fletcher:: Architects, Inc.

ARCHITECTURE ■ PLANNING ■ INTERIORS
1906 NORTH SIGNAL HILLS DRIVE
KIRKWOOD, MO. 63122
TEL. (314) 965-6333
FAX. (314) 965-8997
info@fletcher-architects.com

CONSULTANTS

CIVIL ENGINEER:
FRONTENAC ENGR. GROUP, INC.
16 SUNNEN DR.
ST. LOUIS, MO 63143
PHONE (314) 644-2200
FAX (314) 644-0648

STRUCT. ENGINEER:
ABS CONSULTING
1644 LACKLAND HILLS PARKWAY
ST. LOUIS, MO 63146
PHONE (314) 994-7007
FAX (314) 994-0732

M.E.P. ENGINEER:
SSC ENGINEERING
550 SPIRIT OF ST. LOUIS BLVD.
CHESTERFIELD, MO 63005
PHONE (636) 530-7770
FAX (636) 530-7877

HARDWARE CONSULTANT
8710
5565 PIERRE CT.
ST. LOUIS, MO 63128
PHONE (314) 487-7776
FAX (314) 842-5243

KITCHEN CONSULTANTS
THE GEIGER GROUP
3601 WATSON ROAD
ST. LOUIS, MO 63139
PHONE (314) 645-2087
FAX (314) 645-3308

LANDSCAPE ARCHITECT
AUSTIN TAO AND ASSOC.
2101 LOCUST, 2ND. FLOOR
ST. LOUIS, MO 63103
PHONE (314) 436-3999
FAX (314) 436-9130

INTERIOR DESIGN
OTOOLE DESIGN ASSOC.
124 WEST JEFFERSON
KIRKWOOD, MO 63122
PHONE (314) 909-1906
FAX (314) 909-1906

PROJECT:
ADDITION AND RENOVATIONS TO
McKnight Road
Church of Christ
2515 SOUTH MCKNIGHT ROAD
ST. LOUIS, MO 63124

The Professional Engineer whose personal seal and signature appears on this page assumes responsibility only for what appears on this page and disclaims (pursuant to Section 327.411 RSMo) any responsibility for all other pages, plans, specifications, estimates, reports, or other documents or instruments not sealed by this Professional Engineer relating to, or intended to be used for, any part of parts of the engineering project to which this page refers.

© 2002 BY ABSG CONSULTING

NO	DATE	REVISIONS

PROJECT NO. 01403
DRAWN BY: PWM
CHECKED BY: JNR
DATE: NOVEMBER 1, 2002

SHEET NO. S4.0

CONSTRUCTION/BID DRAWINGS

K:\DWG\1079865 Mcknightfd Church\05Str_0.dwg, 11/01/02 08:51:50 AM, pmarshall, ABS CONSULTING (EAE)

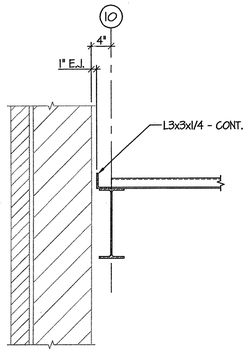

SECTION 1 / 54.1
SCALE: 1"=1'-0"

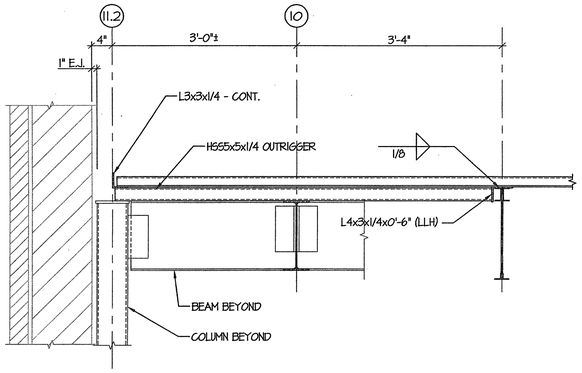

SECTION 2 / 54.1
SCALE: 1"=1'-0"

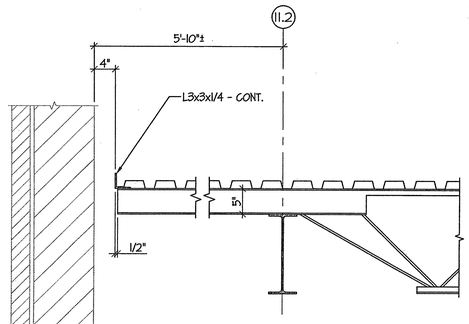

SECTION 3 / 54.1
SCALE: 1"=1'-0"

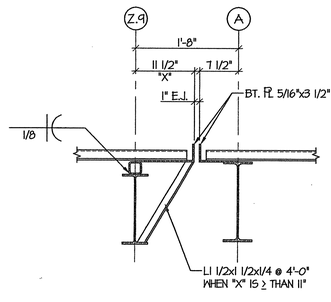

SECTION 4 / 54.1
SCALE: 1"=1'-0"

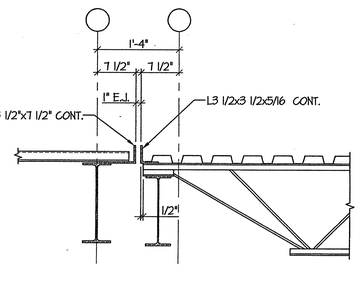

SECTION 5 / 54.1
SCALE: 1"=1'-0"

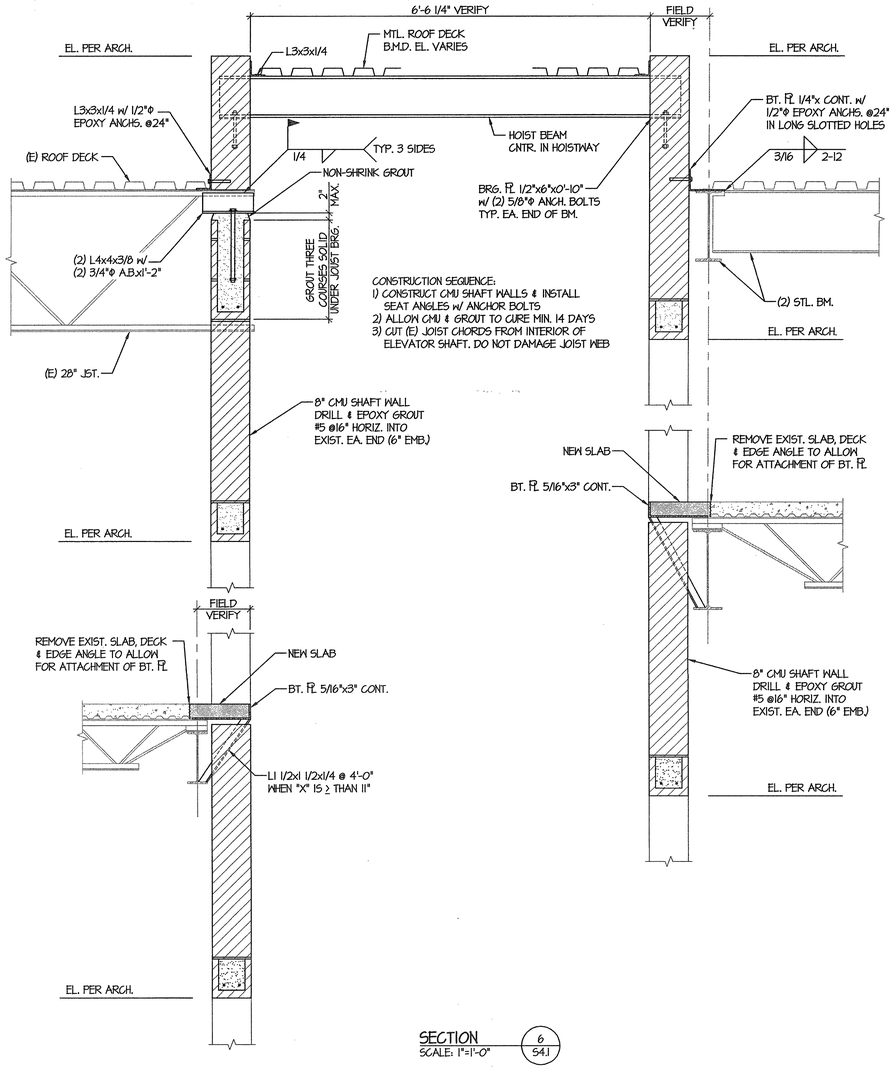

CONSTRUCTION SEQUENCE:
1) CONSTRUCT CMU SHAFT WALLS & INSTALL SEAT ANGLES w/ ANCHOR BOLTS
2) ALLOW CMU & GROUT TO CURE MIN. 14 DAYS
3) CUT (E) JOIST CHORDS FROM INTERIOR OF ELEVATOR SHAFT. DO NOT DAMAGE JOIST WEB

SECTION 6 / 54.1
SCALE: 1"=1'-0"

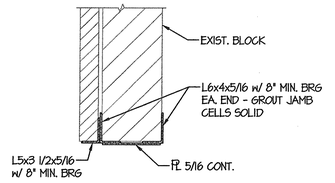

SECTION 7 / 54.1
SCALE: 1"=1'-0"

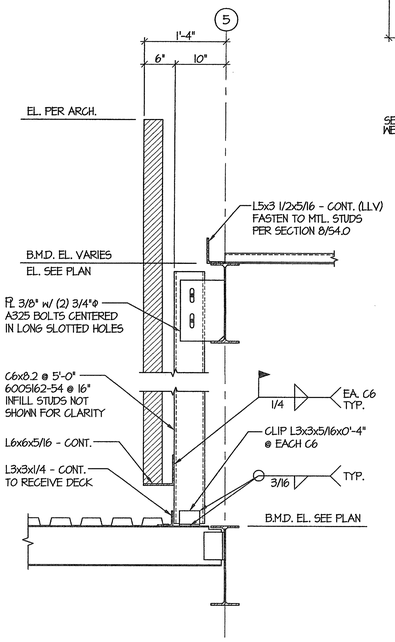

SECTION 8 / 54.1
SCALE: 1"=1'-0"

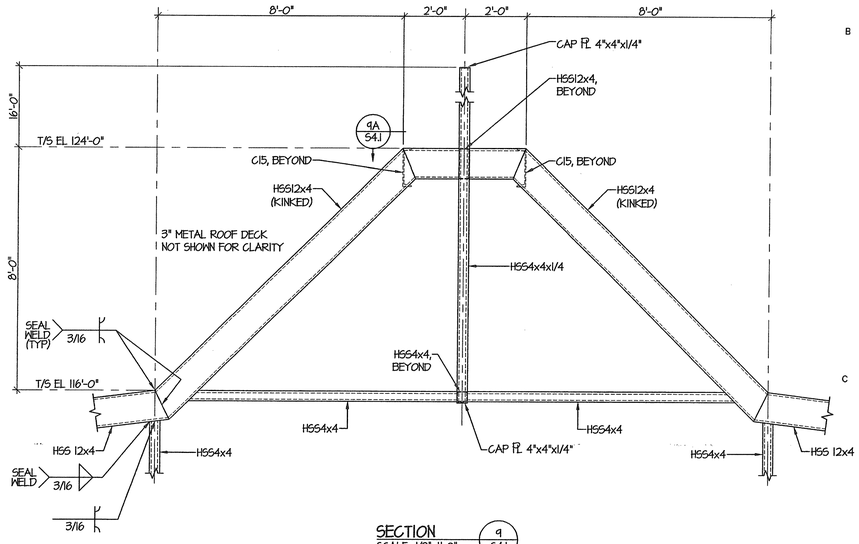

SECTION 9 / S4.1
SCALE: 1/2"=1'-0"

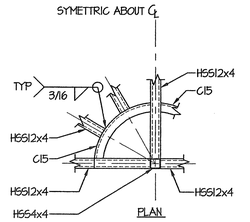

SECTION 9A / S4.1
SCALE: 1/2"=1'-0"

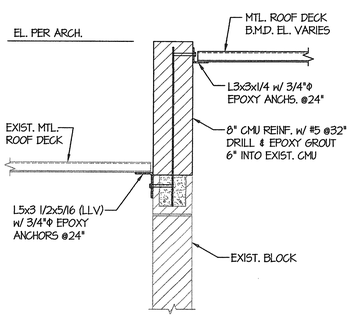

SECTION 11 / S4.1
SCALE: 1"=1'-0"

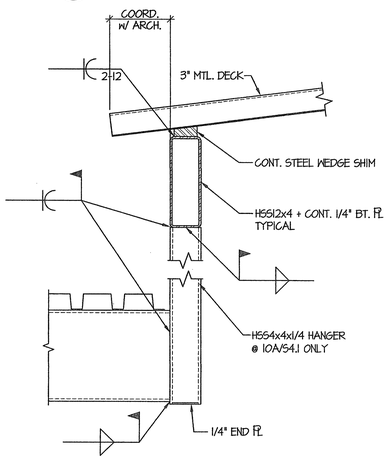

SECTION 10 / 10A / S4.1
SCALE: 1 1/2"=1'-0"

Fletcher::
Architects, Inc.

ARCHITECTURE ■ PLANNING ■ INTERIORS
1906 NORTH SIGNAL HILLS DRIVE
KIRKWOOD, MO. 63122
TEL. (314) 965-6333
FAX. (314) 965-8997
info@fletcher-architects.com

CONSULTANTS

CIVIL ENGINEER:
FRONTENAC ENGR. GROUP, INC.
16 SUNNEN DR.
ST. LOUIS, MO 63143
PHONE (314) 644-2300
FAX (314) 644-0646

STRUCT. ENGINEER:
ABS CONSULTING
1644 LACKLAND HILLS PARKWAY
ST. LOUIS, MO 63146
PHONE (314) 994-7007
FAX (314) 994-0722

M.E.P. ENGINEER:
SSC ENGINEERING
550 SPIRIT OF ST. LOUIS BLVD.
CHESTERFIELD, MO 63005
PHONE (636) 530-7770
FAX (636) 530-7877

HARDWARE CONSULTANT
8710
5555 PIERRE CT.
ST. LOUIS, MO 63128
PHONE (314) 487-7776
FAX (314) 842-2242

KITCHEN CONSULTANTS
THE GIEGER GROUP
3601 WATSON ROAD
ST. LOUIS, MO 63139
PHONE (314) 645-2987
FAX (314) 646-5208

LANDSCAPE ARCHITECT
AUSTIN TAO. AND ASSOC.
2101 LOCUST, 2ND. FLOOR
ST. LOUIS, MO 63103
PHONE (314) 436-2999
FAX (314) 436-2100

INTERIOR DESIGN
OTOOLE DESIGN ASSOC.
124 WEST JEFFERSON
KIRKWOOD, MO 63122
PHONE (314) 909-1905
FAX (314) 909-1906

PROJECT:
ADDITION AND RENOVATIONS TO
McKnight Road
Church of Christ
2515 SOUTH MCKNIGHT ROAD
ST. LOUIS, MO 63124

The Professional Engineer whose personal seal and signature appears on this page assumes responsibility only for what appears on this page and disclaims (pursuant to Section 327.411 RSMo) any responsibility for all other pages, plans, specifications, estimates, reports, or other documents or instruments not sealed by this Professional Engineer relating to, or intended to be used for, any part of parts of the engineering project to which this page refers.

© 2002 BY ABSG CONSULTING

NO	DATE	REVISIONS

PROJECT NO. 01403
DRAWN BY: PWM
CHECKED BY: JNR
DATE: NOVEMBER 1, 2002

SHEET NO. S4.1

CONSTRUCTION/BID DRAWINGS

K:\DWG\1079965 McKnightRd Church\965s4_1.dwg, 11/01/02 08:52:27 AM, pmarshall, ABS CONSULTING (EQE)

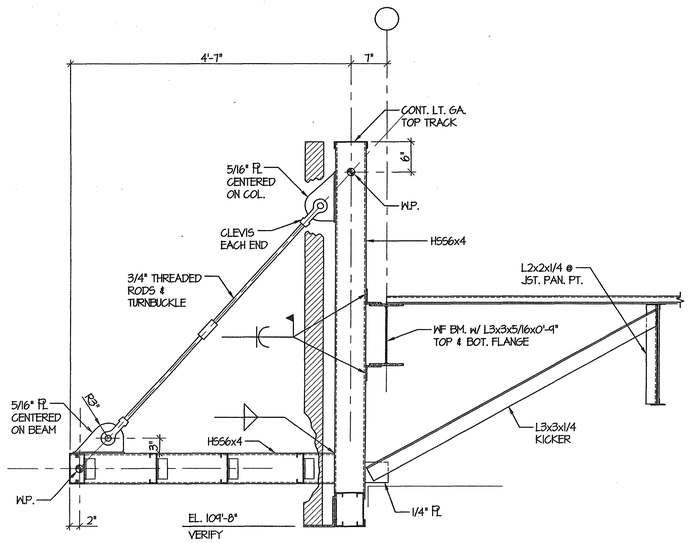

SECTION 1/S4.2
SCALE: 1"=1'-0"

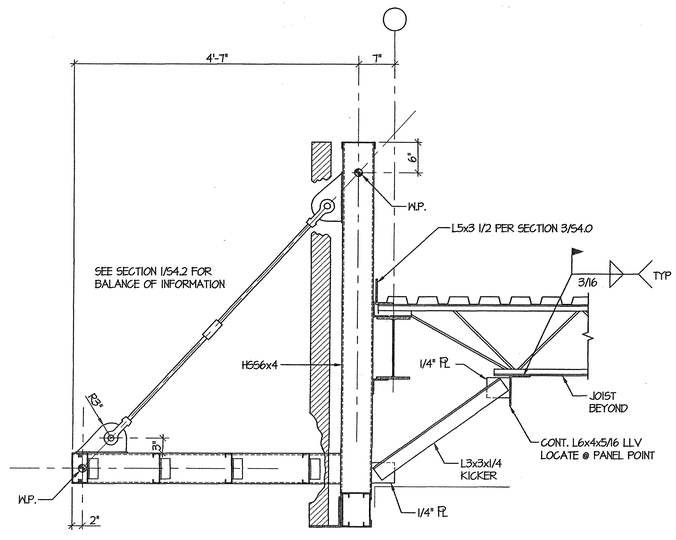

SECTION 2/S4.2
SCALE: 1"=1'-0"

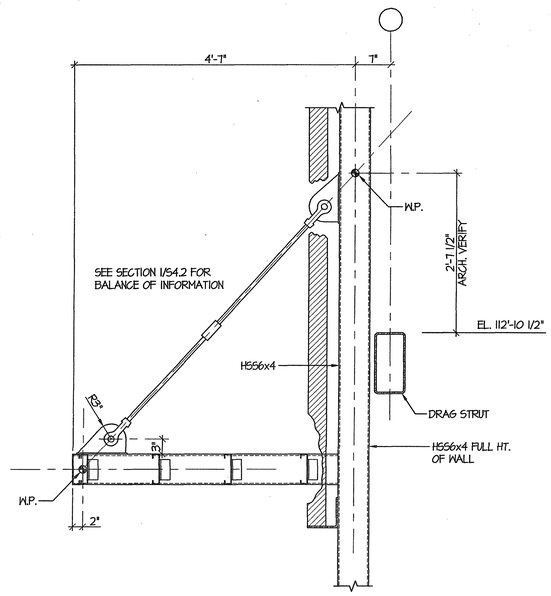

SECTION 3/S4.2
SCALE: 1"=1'-0"

Fletcher:: Architects, Inc.

ARCHITECTURE ■ PLANNING ■ INTERIORS
1906 NORTH SIGNAL HILLS DRIVE
KIRKWOOD, MO. 63122
TEL. (314) 965-6333
FAX. (314) 965-8997
Info@fletcher-architects.com

CONSULTANTS

CIVIL ENGINEER:
FRONTENAC ENGR. GROUP, INC.
16 SUNNEN DR.
ST. LOUIS, MO 63143
PHONE (314) 644-2200
FAX (314) 644-0845

STRUCT. ENGINEER:
ABS CONSULTING
1644 LACKLAND HILLS PARKWAY
ST. LOUIS, MO 63146
PHONE (314) 994-7007
FAX (314) 994-0722

M.E.P. ENGINEER:
SSC ENGINEERING
850 SPIRIT OF ST. LOUIS BLVD.
CHESTERFIELD, MO 63005
PHONE (636) 530-7770
FAX (636) 530-7677

HARDWARE CONSULTANT
8710
8858 PIERRE CT.
ST. LOUIS, MO 63128
PHONE (314) 487-7776
FAX (314) 842-3243

KITCHEN CONSULTANTS
THE GEIGER GROUP
2501 WATSON ROAD
ST. LOUIS, MO 63139
PHONE (314) 645-2987
FAX (314) 645-2208

LANDSCAPE ARCHITECT
AUSTIN TAO. AND ASSOC.
2101 LOCUST, 2ND. FLOOR
ST. LOUIS, MO 63103
PHONE (314) 436-2999
FAX (314) 436-9250

INTERIOR DESIGN
OTOOLE DESIGN ASSOC.
126 WEST JEFFERSON
KIRKWOOD, MO 63122
PHONE (314) 909-1905
FAX (314) 909-1908

PROJECT:
ADDITION AND RENOVATIONS TO
McKnight Road Church of Christ
2515 SOUTH MCKNIGHT ROAD
ST. LOUIS, MO 63124

The Professional Engineer whose personal seal and signature appears on this page assumes responsibility only for what appears on this page and discipline (pursuant to Section 327.411 RSMo) any responsibility for all other pages, plans, specifications, estimates, reports, or other documents or instruments not sealed by this Professional Engineer relating to, or intended to be used for, any part of parts of the engineering project to which this page refers.

© 2002 BY ABSG CONSULTING

NO	DATE	REVISIONS

PROJECT NO. 01403
DRAWN BY: PWM
CHECKED BY: JNR
DATE: NOVEMBER 1, 2002

SHEET NO. S4.2

CONSTRUCTION/BID DRAWINGS

K:\DWG\1079965 McKnightRd Church\965s4_2.dwg, 11/01/02 08:52:56 AM, pmarshall, ABS CONSULTING (EQE)

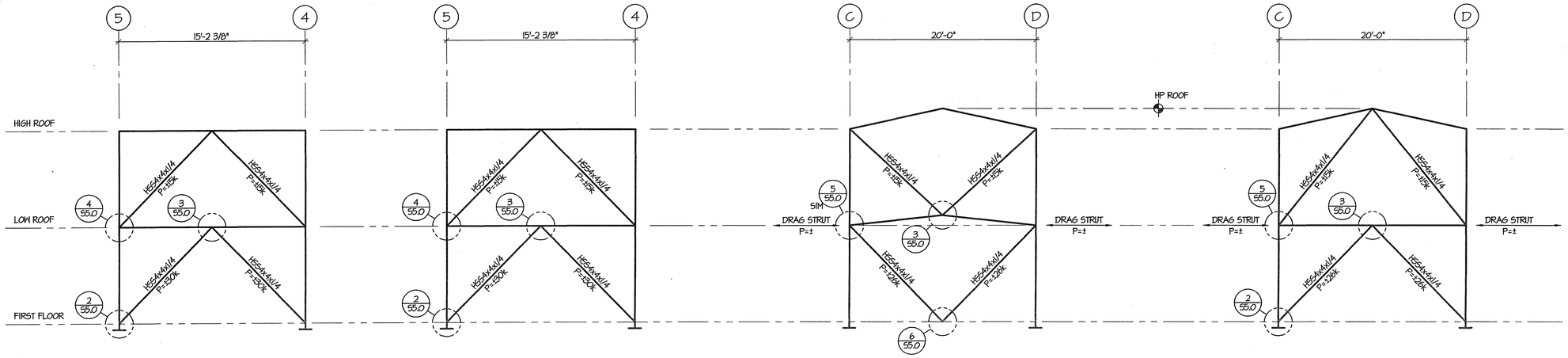

VB-1

VB-2

VB-3

VB-4

NOTE:
COORDINATE DOOR LOCATIONS w/ BRACE LOCATIONS.

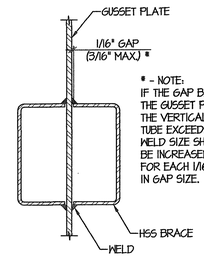

TYPICAL HSS SLOT TO GUSSET PLATE FIT

DETAIL SCALE: 1"=1'-0" 1 55.1

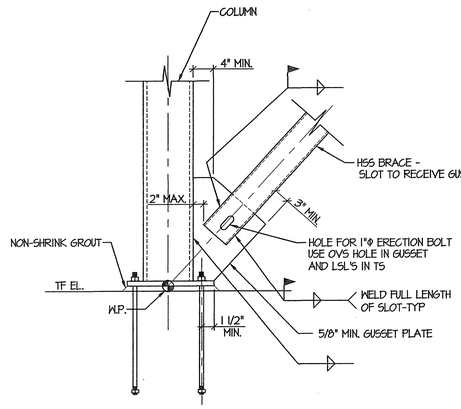

DETAIL SCALE: 1"=1'-0" 2 55.0

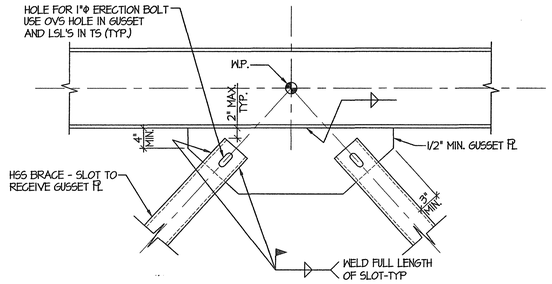

DETAIL SCALE: 1"=1'-0" 3 55.0

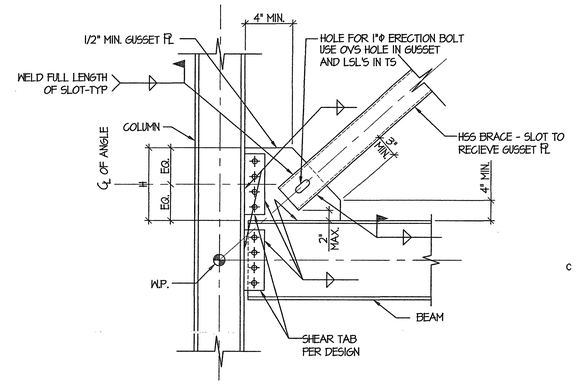

DETAIL SCALE: 1"=1'-0" 4 55.0

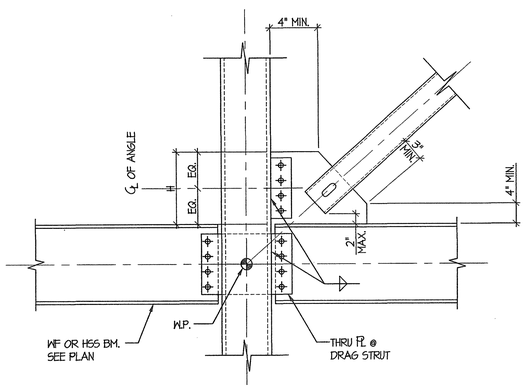

DETAIL SCALE: 1"=1'-0" 5 55.0

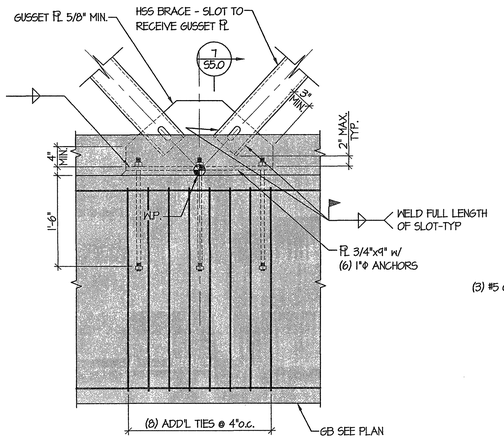

DETAIL SCALE: 1"=1'-0" 6 55.0

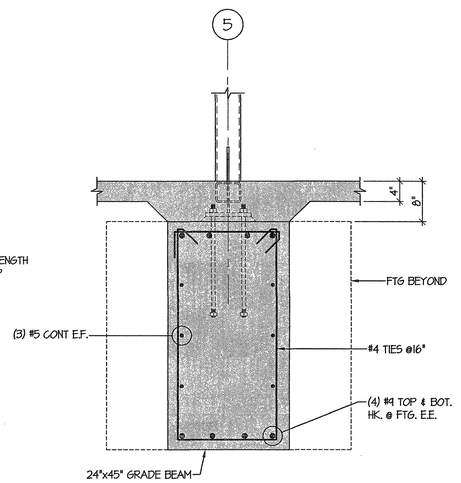

DETAIL SCALE: 1"=1'-0" 7 55.0

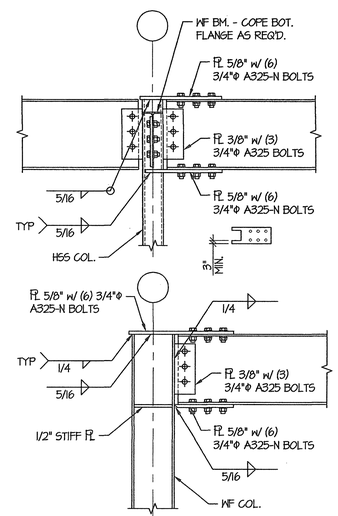

TYPICAL MOMENT CONNECTION DETAILS 1"=1'-0" 8 55.0

Fletcher:: Architects, Inc.

ARCHITECTURE ■ PLANNING ■ INTERIORS
1906 NORTH SIGNAL HILLS DRIVE
KIRKWOOD, MO. 63122
TEL. (314) 965-6333
FAX. (314) 965-8997
info@fletcher-architects.com

CONSULTANTS

CIVIL ENGINEER:
FRONTENAC ENGR. GROUP, INC.
16 SUMNEN DR.
ST. LOUIS, MO 63143
PHONE (314) 644-2200
FAX (314) 644-0645

STRUCT. ENGINEER:
ABS CONSULTING
1644 LACKLAND HILLS PARKWAY
ST. LOUIS, MO 63146
PHONE (314) 994-7007
FAX (314) 994-0732

M.E.P. ENGINEER:
SSC ENGINEERING
550 SPIRIT OF ST. LOUIS BLVD.
CHESTERFIELD, MO 63005
PHONE (636) 530-7770
FAX (636) 530-7877

HARDWARE CONSULTANT
8710
6565 PIERRE CT.
ST. LOUIS, MO 63128
PHONE (314) 487-7776
FAX (314) 842-2242

KITCHEN CONSULTANTS
THE GEIGER GROUP
3501 WATSON ROAD
ST. LOUIS, MO 63139
PHONE (314) 646-2967
FAX (314) 645-2209

LANDSCAPE ARCHITECT
AUSTIN TAO, AND ASSOC.
2101 LOCUST, 2ND. FLOOR
ST. LOUIS, MO 63103
PHONE (314) 436-3999
FAX (314) 436-9120

INTERIOR DESIGN
OTOOLE DESIGN ASSOC.
124 WEST JEFFERSON
KIRKWOOD, MO 63122
PHONE (314) 909-1906
FAX (314) 909-1908

PROJECT:
ADDITION AND RENOVATIONS TO
McKnight Road Church of Christ
2515 SOUTH MCKNIGHT ROAD
ST. LOUIS, MO 63124

The Professional Engineer whose personnel seal and signature appears on this page assumes responsibility only for what appears on this page and disclaims (pursuant to Section 327.411 RSMo) any responsibility for all other pages, plans, specifications, estimates, reports, or other documents or instruments not sealed by this Professional Engineer relating to, or intended to be used for, any part of parts of the engineering project to which this page relates.

© 2002 BY ABSG CONSULTING

NO	DATE	REVISIONS

PROJECT NO. 01403
DRAWN BY: PWM
CHECKED BY: JNR
DATE: NOVEMBER 1, 2002

SHEET NO. **S5.0**

CONSTRUCTION/BID DRAWINGS

K:\DWG\1079865 McKnightRd Church\9656s5_0.dwg, 11/01/02 08:53:29 AM, pmarshall, ABS CONSULTING (EQE)

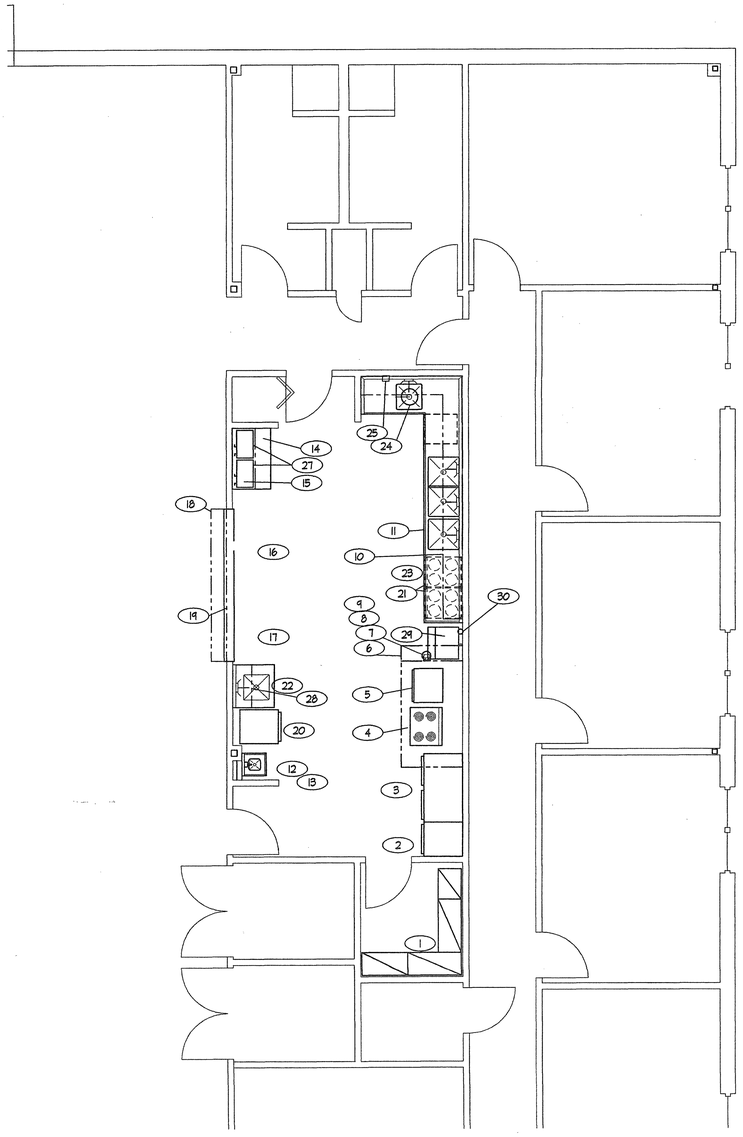

EQUIPMENT PLAN AT 1/4" = 1'

EQUIPMENT SCHEDULE					
ITEM#	QTY	DESCRIPTION	STATUS	REMARKS	ITEM#
1	1 LT	SHELVING-STORAGE	1		1
2	1	FREEZER-REACH-IN	1		2
3	1	REFRIGERATOR-REACH-IN	1		3
4	1	RANGE-FOUR BURNER	3	INSTALLED BY FSES	4
5	1	CONVECTION OVEN	3	INSTALLED BY FSES	5
6	1	EXHAUST HOOD	1		6
7	1LT	FIRE SUPPRESSION SYSTEM	1	INSTALLED ON END OF HOOD	7
8	-	EXHAUST FAN	2		8
9	-	MAKE UP AIR UNIT	2		9
10	1	WALL CABINET	1		10
11	1	POTSINK/PREP COUNTER	1		11
12	1	HAND SINK	1		12
13	-	DISPENSER-TOWEL/SOAP	3		13
14	1	WORK TABLE	1	MOBILE	14
15	1	WALL SHELF	1		15
16	-	COLD FOOD STATION-MOBILE	6		16
17	-	HOT FOOD STATION-MOBILE	6		17
18	-	ROLLING DOOR	4		18
19	1	STAINLESS STEEL SILL	1		19
20	1	HOT FOOD CABINET	5		20
21	2	DISH CART	1		21
22	1	WORKTABLE W/ SINK	1		22
23	1	DISHMACHINE - UNDERCOUNTER	1	W/ BUILT IN BOOSTER HEATER	23
24	1	DISPOSER	1		24
25	1	DISPOSER CONTROL	1	MOUNTED TO REAR OF SPLASH	25
26	-	SPARE #	-		26
27	2	MICROWAVE OVEN	3	SET ON #15 SHELF	27
28	1	WALL CABINET	1		28
29	1	ICE MACHINE W/ BIN	1	MOBILE	29
30	1	FILTER	1	WALL MOUNTED	30

STATUS LEGEND
1 FOOD SERVICE EQUIPMENT SUPPLIER
2 MECHANICAL CONTRACTOR
3 OWNER/AGENT
4 ARCHITECTURAL TRADE
5 EXISTING - RELOCATED BY GC
6 FUTURE

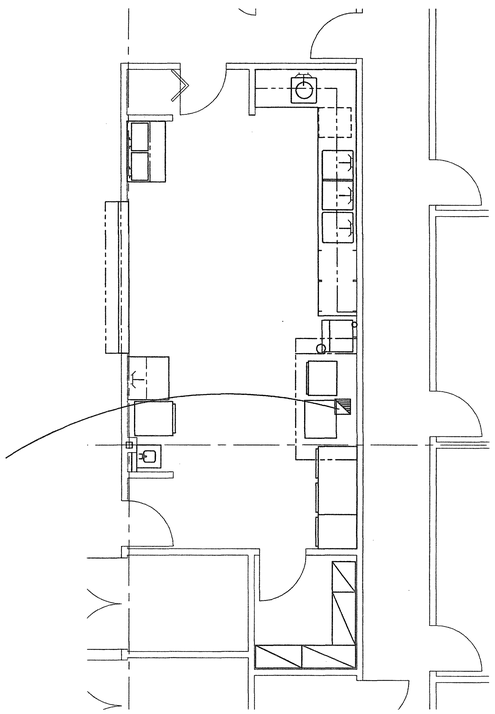

EXHAUST CONNECTION , 12" X 12" NOMINAL, 1500 CFM, -0.380" S.P., NFPA 96 COMPLIANT GREASETIGHT WELDED DUCTWORK

VENTILATION PLAN AT 1/4" = 1'

Fletcher:: Architects, Inc.

ARCHITECTURE ■ PLANNING ■ INTERIORS
1906 NORTH SIGNAL HILLS DRIVE
KIRKWOOD, MO. 63122
TEL. (314) 965-6333
FAX. (314) 965-8997
info@fletcher-architects.com

CONSULTANTS

CIVIL ENGINEER:
FRONTENAC ENGR. GROUP, INC.
16 BUNKUM DR.
ST. LOUIS, MO 63146
PHONE (314) 344-0900
FAX (314) 344-0345

STRUCT. ENGINEER:
ABS CONSULTING
1544 LACKLAND HILLS PARKWAY
ST. LOUIS, MO 63146
PHONE (314) 994-7007
FAX (314) 994-0722

M.E.P. ENGINEER:
SSO ENGINEERING
550 SPIRIT OF ST. LOUIS BLVD.
CHESTERFIELD, MO 63005
PHONE (636) 530-7770
FAX (636) 530-7877

HARDWARE CONSULTANT
STO
6666 PIERRE CT.
ST. LOUIS, MO 63123
PHONE (314) 487-7776
FAX (314) 842-2345

KITCHEN CONSULTANTS
THE GREEN GROUP
2801 WATSON ROAD
ST. LOUIS, MO 63139
PHONE (314) 645-2997
FAX (314) 645-2996

LANDSCAPE ARCHITECT
AUSTIN TAO AND ASSOC.
2101 LOCUST, 2ND. FLOOR
ST. LOUIS, MO 63103
PHONE (314) 432-2020
FAX (314) 432-2382

INTERIOR DESIGN
O'TOOLE DESIGN ASSOC.
104 WEST JEFFERSON
KIRKWOOD, MO 63122
PHONE (314) 822-2205
FAX (314) 822-2209

PROJECT:
ADDITION AND RENOVATIONS TO
McKnight Road
Church of Christ
2515 SOUTH MCKNIGHT ROAD
ST. LOUIS, MO 63124

FOOD SERVICE EQUIPMENT
PLAN & SCHEDULE
& VENTILATION PLAN

THE SEAL AND SIGNATURES APPLY ONLY TO THE DOCUMENT TO WHICH THEY ARE AFFIXED, AND WE EXPRESSLY DISCLAIM RESPONSIBILITY FOR ANY ALTERATIONS TO PLANS, SPECIFICATIONS, ESTIMATES, REPORTS, OR OTHER DOCUMENTS OR INSTRUMENTS RELATING TO OR INTENDED TO BE USED FOR ANY PART OR PARTS OF THE PROJECT.

COPYRIGHT 2002 FLETCHER ARCHITECTS, INC.

NO	DATE	REVISIONS
	00/00/01	ADDENDUM #0

PROJECT NO. 01403
DRAWN BY: JG SER
CHECKED BY: JG MEF
DATE: NOVEMBER 1, 2002

SHEET NO. FS1

CONSTRUCTION/BID DRAWINGS

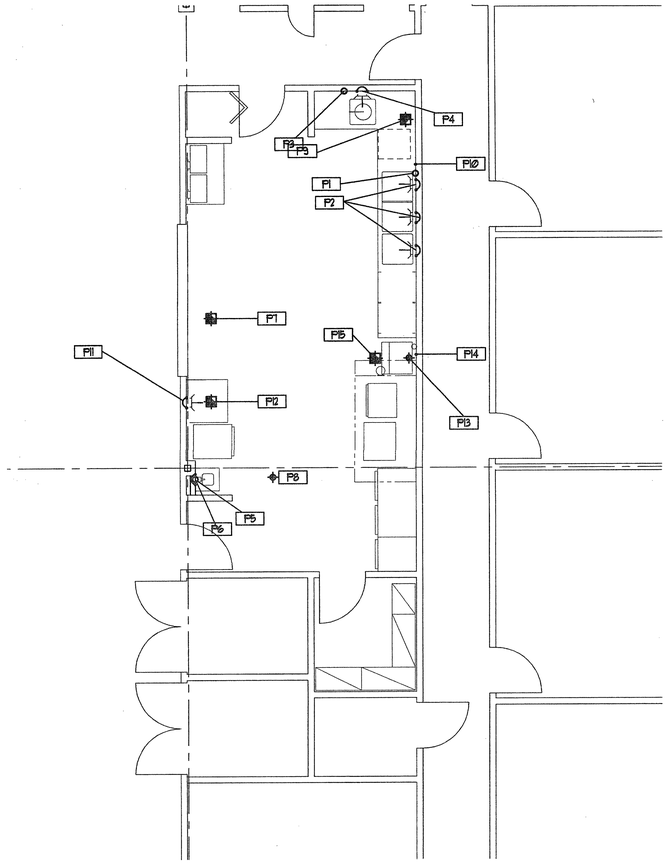

PLAN @ 1/4" = 1'

PLUMBING/GAS CONNECTION SCHEDULE													
CONN#	SYM	ITEM#	CONNECTION DESCRIPTION	HW	CW	DR SIZE	DR TYPE	GAS	KBTUH	AFF	LOCATION	REMARKS	CONN#
P1	DW	11	POT SINK/PREP COUNTER			2	DW			14	OUT WALL		P1
P2	HWCW	11	POT SINK/PREP COUNTER	1/2	1/2					16	OUT WALL		P2
P3	DW	24	DISPOSER			2	DW			10	OUT WALL		P3
P4	HWCW	11	POT SINK/PREP COUNTER	1/2	3/4					16	OUT WALL	SEE DISPOSER DETAIL THIS SHEET	P4
P5	DW	12	HAND SINK			1 1/2	DW			22	OUT WALL		P5
P6	HWCW	12	HAND SINK	1/2	1/2					16	OUT WALL		P6
P7	FSS	17	HOT FOOD STATION = MOBILE			1	FS			0	IN FLOOR		P7
P8	FD		GENERAL PURPOSE FLOOR DRAIN			3	FD			0	IN FLOOR		P8
P9	FSS	23	DISHMACHINE - UNDERCOUNTER			1 1/2	FS			0	IN FLOOR		P9
P10	HW	23	DISHMACHINE - UNDERCOUNTER	3/4						16	OUT WALL		P10
P11	HWCW	22	WORK TABLE W/ SINK	1/2	1/2					16	OUT WALL		P11
P12	FSS	22	WORK TABLE W/ SINK			2	FD			0	IN FLOOR		P12
P13	FD	29	ICE MACHINE W/ BIN			(2)1"	FS			0	IN FLOOR	FSES TO PIPER DRAINS TO HERE	P13
P14	CW	29/30	ICE MACHINE/ FILTER		1/2					36	OUT WALL	FSES BRANCH FROM FILTER TO #29	P14
P15	FSS		GENERAL PURPOSE										P15

PLUMBING LEGEND

- HW & CW SUPPLY
- HW OR CW SUPPLY
- FLOOR SINK - HALF GRATE
- FLOOR SINK - 3/4 GRATE
- FLOOR SINK - FULL GRATE
- FLOOR DR
- FUNNEL DR
- HUB DR
- DIRECT WASTE
- GAS
- PLUMBING NOTE - SEE REMARKS

ROUGH-IN CODES

HW	= HOT WATER
CW	= COLD WATER
DR	= DRAIN - SOLID CONNECTION
IW	= IN WALL
FS	= FLOOR SINK
FD	= FLOOR DRAIN
FA	= FROM ABOVE
AFF	= HEIGHT ABOVE FINISHED FLOOR
BTC	= BRANCH TO CONNECTION ON EQUIPMENT
KBTUH	= 1000 BTU PER HOUR
FSES	= FOOD SERVICE EQUIP. SUPPLIER - DIV. 11
AT	= ARCHITECTURAL TRADES - DIV. 2-14
MC	= MECHANICAL CONTRACTOR - DIV. 15
PC	= PLUMBING CONTRACTOR - DIV. 15
EC	= ELECTRICAL CONTRACTOR - DIV. 16

ELECTRICAL LEGEND

- DUPLEX RECEPTACLE
- SINGLE RECEPTACLE
- SPECIAL PURPOSE, 120V
- SPECIAL PURPOSE, 150V+, 1PH
- SPECIAL PURPOSE, POLYPHASE
- JUNCTION BOX/DIRECT CONNECTION
- DISCONNECT SWITCH (ED)
- FLOOR RECEPTACLE
- FLUSH FLOOR RECEPTACLE
- CONDUIT STUB (E)
- CEILING RECEPTACLE
- CEILING PENDANT
- ELECTRICAL NOTE
- WALL SWITCH
- FIELD WIRED LIGHT FIXTURE
- PHONE JACK

ELECTRICAL CONNECTION SCHEDULE																	
	RI-ENT	CONN#	SYM	ITEM#	CONNECTION DESCRIPTION	KW	HP	FLA	VOLTS	PH	SR	DR	DC	AFF	LOCATION	REMARKS	CONN#
1		E1	SR	2	FREEZER - REACH-IN			12	120	1	X			84	IN WALL		E1
2		E2	SR	3	REFRIGERATOR - REACH-IN			12	120	1	X			84	IN WALL		E2
3		E3	SP021	4	RANGE - FOUR BURNER	11.0			208	1	X			18	IN WALL	TYPICAL LOAD ONLY, VERIFY, SEE NOTE E1	E3
4		E4	SP021	5	CONVECTION OVEN	6.8		30	208	1			X	18	IN WALL	TYPICAL LOAD ONLY, VERIFY, SEE NOTE E1	E4
5		E5	DC	6	EXHAUST HOOD - LIGHTS			2	120	1			X	110	FROM ABOVE	SEE NOTES E1 AND E2	E5
6		E6	EN	7	FIRE SUPPRESSION SYSTEM				"				X	110	FROM ABOVE	SEE NOTE E1	E6
7		E7	WS	8	WALL SWITCHES - LIGHTS & FANS				"	"				48	IN WALL	SEE NOTE E4	E7
8		E8	EN	9	SUPPLY AIR				"							SEE NOTE E1	E8
9		E9	DR	16	COLD FOOD STATION - MOBILE			7	120	1		X		18	IN WALL		E9
10		E10	SP021	17	HOT FOOD STATION = MOBILE	4.0			208	1	X			18	IN WALL		E10
11		E11	SR	20	HOT FOOD CABINET	4.0			120	1	X			18	IN WALL		E11
12		E12	DC	23	DISHMACHINE - UNDERCOUNTER	9.3		38.9	120/208	1			X	18	IN WALL	NEUTRAL REQUIRED	E12
13		E13	DC	24	DISPOSER		2		208	1			X	18	IN WALL		E13
14		E14	DR	27	MICROWAVE OVEN			16	120	1		X		60	IN WALL		E14
15		E15	CR		CONVENIENCE RECEPTACLE			16	120	1		X		60	IN WALL	GENERAL PURPOSE	E15
16		E16	SR	29	ICE MACHINE		1/4	15	120	1		X		42	IN WALL		E15

FLA = FULL LOAD AMPS
SR = SIMPLEX RECEPTACLE
DR = DUPLEX RECEPTACLE
DC = DIRECT CONNECTION/HARDWIRE
AFF = HEIGHT IN INCHES ABOVE FINISH FLOOR TO CENTERLINE OF ROUGH-IN
EC = ELECTRICAL CONTRACTOR - DIV 16
FSES = FOOD SERVICE EQUIPMENT SUPPLIER

1 FIRE SUPPRESSION SYSTEM SHALL CONTAIN A MULTI-POLE NO/NC SWITCH, SWITCHED ON ACTUATION OF THE SYSTEM. ELECTRICAL CONTRACTOR SHALL WIRE THIS SWITCH INTO CONTROL CIRCUITS, PROVIDING AUTOMATIC SHUTDOWN OF SUPPLY AIR AND DISCONNECTION OF POWER CIRCUITS SUPPLYING EQUIPMENT UNDER THE HOOD AND THE HOOD LIGHTS, UPON DISCHARGE OF THE FIRE SUPPRESSION SYSTEM.

2 ALL CONNECTIONS UNLESS OTHERWISE NOTED BRANCHED FROM BUILDING SUPPLY TO EQUIPMENT CONNECTIONS BY RESPECTIVE TRADES AND IS NOT A PART OF FSES RESPONSIBILITIES.

3 EXCEPT IN THE CASE OF DUPLEX RECEPTACLES WHERE THEY ARE INDICATED AT 20 AMP, AND PANELBOARDS WHERE THEIR MAXIMUM RATING IS GIVEN, ALL AMPERAGES SHOWN ARE THE LOAD OF THE EQUIPMENT AND THE ELECTRICAL CONTRACTOR MUST CALCULATE BREAKER SIZE IN ACCORDANCE WITH NEC. HEIGHTS ARE TO THE CENTERLINE OF THE EQUIPMENT.

4 EC SUPPLY AND WIRE WALL SWITCHES FOR HOOD LIGHTS, EXHAUST FAN, MAKE UP AIR FAN AND HEAT.

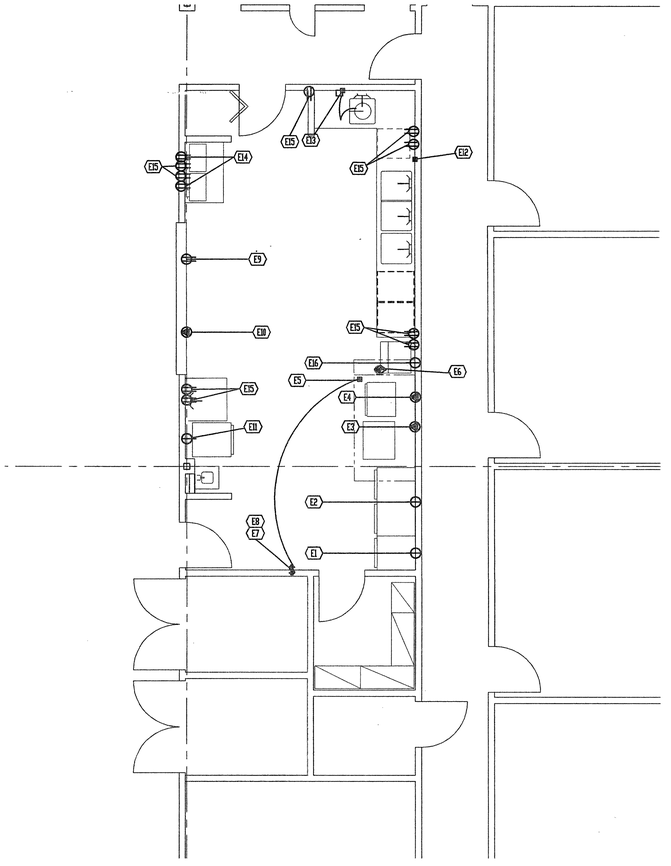

PLAN @ 1/4" = 1'

Fletcher:: Architects, Inc.
ARCHITECTURE ■ PLANNING ■ INTERIORS
1906 NORTH SIGNAL HILLS DRIVE
KIRKWOOD, MO. 63122
TEL. (314) 965-6333
FAX. (314) 965-8997
info@fletcher-architects.com

CONSULTANTS

CIVIL ENGINEER:
FRONTENAC ENGR. GROUP, INC.
13 SUMMER DR.
ST. LOUIS, MO 63043
PHONE (314) 344-2200
FAX (314) 344-2845

STRUCT. ENGINEER:
ABS CONSULTING
1944 LACKLAND HILLS PARKWAY
ST. LOUIS, MO 63146
PHONE (314) 994-7007
FAX (314) 994-0728

M.E.P. ENGINEER:
SEO ENGINEERING
680 SPIRIT OF ST. LOUIS BLVD.
CHESTERFIELD, MO 63005
PHONE (636) 530-7770
FAX (636) 530-7677

HARDWARE CONSULTANT
STID
6835 PIERCE CT.
ST. LOUIS, MO 63088
PHONE (314) 457-7770
FAX (314) 502-5245

KITCHEN CONSULTANTS
THE GEORGES GROUP
6912 WATSON ROAD
ST. LOUIS, MO 63119
PHONE (314) 645-2887
FAX (314) 645-2803

LANDSCAPE ARCHITECT
AUSTIN TAO AND ASSOC.
2104 LOCUST, 2ND. FLOOR
ST. LOUIS, MO 63103
PHONE (314) 436-8899
FAX (314) 436-0180

INTERIOR DESIGN
CYCOLE DESIGN ASSOC.
124 WEST KIRKWOOD
KIRKWOOD, MO 63122
PHONE (314) 909-1535
FAX (314) 909-1520

PROJECT:
ADDITION AND RENOVATIONS TO
McKnight Road
Church of Christ
2515 SOUTH MCKNIGHT ROAD
ST. LOUIS, MO 63124

FOOD SERVICE EQUIPMENT PLUMBING AND ELECTRICAL ROUGH-IN PLANS

THE SEAL AND SIGNATURES APPLY SOLELY TO THE DOCUMENT BEARING THEM AND NOT TO ANY ADDITIONAL OR SUBSTITUTE DOCUMENTS OR ELECTRONIC FILES AS, OTHER PLANS, SPECIFICATIONS, ESTIMATES, REPORTS, OR OTHER DOCUMENTS OR INSTRUMENTS RELATING TO OR INTENDED TO BE USED FOR ANY PART OR PARTS OF THE PROJECT.

COPYRIGHT 2002 FLETCHER ARCHITECTS, INC.

NO	DATE	REVISIONS
	00/00/01	ADDENDUM #0

PROJECT NO. 01403
DRAWN BY: SER
CHECKED BY: MEF
DATE: NOVEMBER 1, 2002
SHEET NO. FS2

CONSTRUCTION/BID DRAWINGS

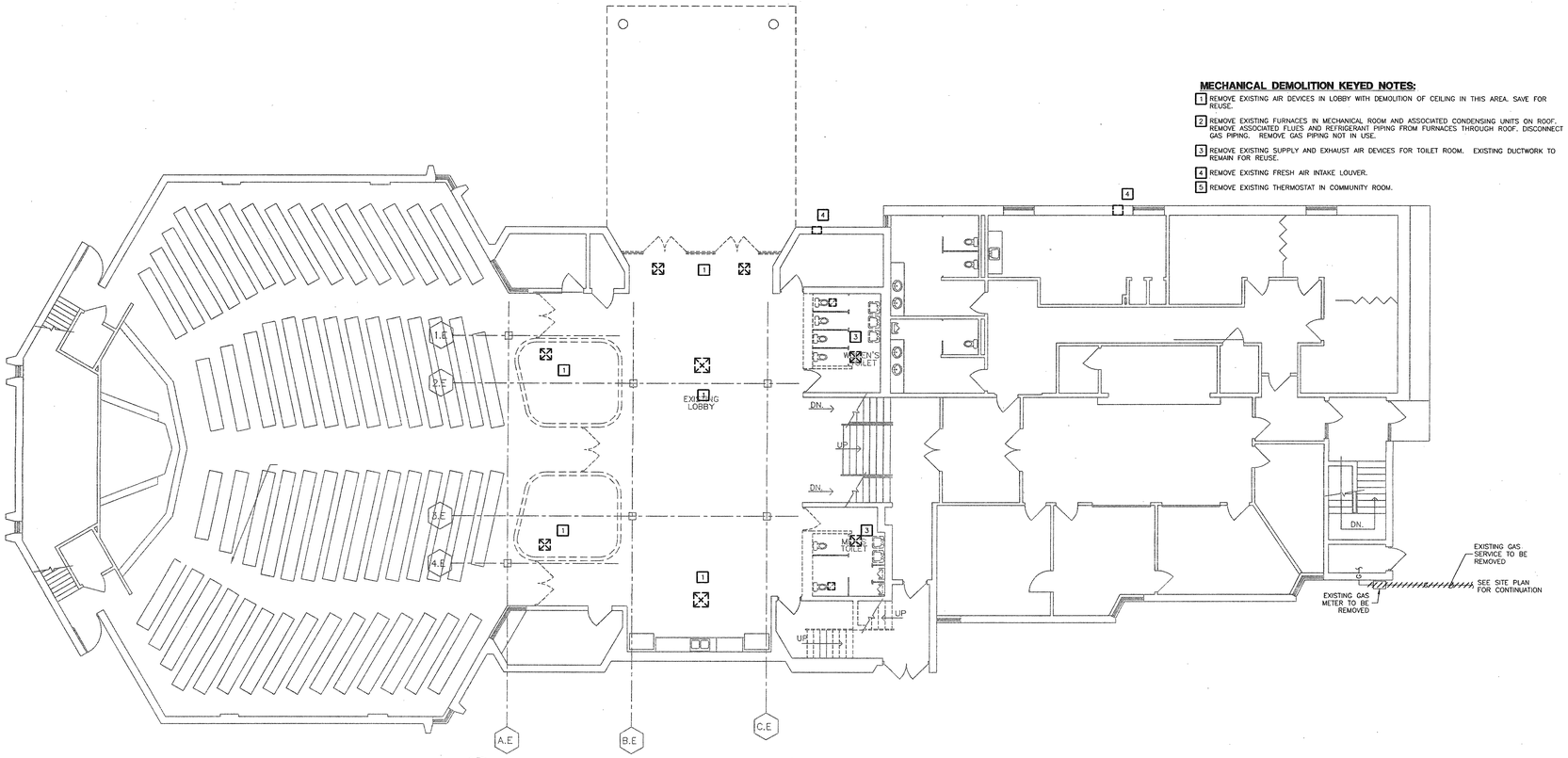

MECHANICAL DEMOLITION KEYED NOTES:

1. REMOVE EXISTING AIR DEVICES IN LOBBY WITH DEMOLITION OF CEILING IN THIS AREA. SAVE FOR REUSE.
2. REMOVE EXISTING FURNACES IN MECHANICAL ROOM AND ASSOCIATED CONDENSING UNITS ON ROOF. REMOVE ASSOCIATED FLUES AND REFRIGERANT PIPING FROM FURNACES THROUGH ROOF. DISCONNECT GAS PIPING. REMOVE GAS PIPING NOT IN USE.
3. REMOVE EXISTING SUPPLY AND EXHAUST AIR DEVICES FOR TOILET ROOM. EXISTING DUCTWORK TO REMAIN FOR REUSE.
4. REMOVE EXISTING FRESH AIR INTAKE LOUVER.
5. REMOVE EXISTING THERMOSTAT IN COMMUNITY ROOM.

MECHANICAL FIRST FLOOR DEMOLITION PLAN

SCALE: 1/8" = 1' - 0"

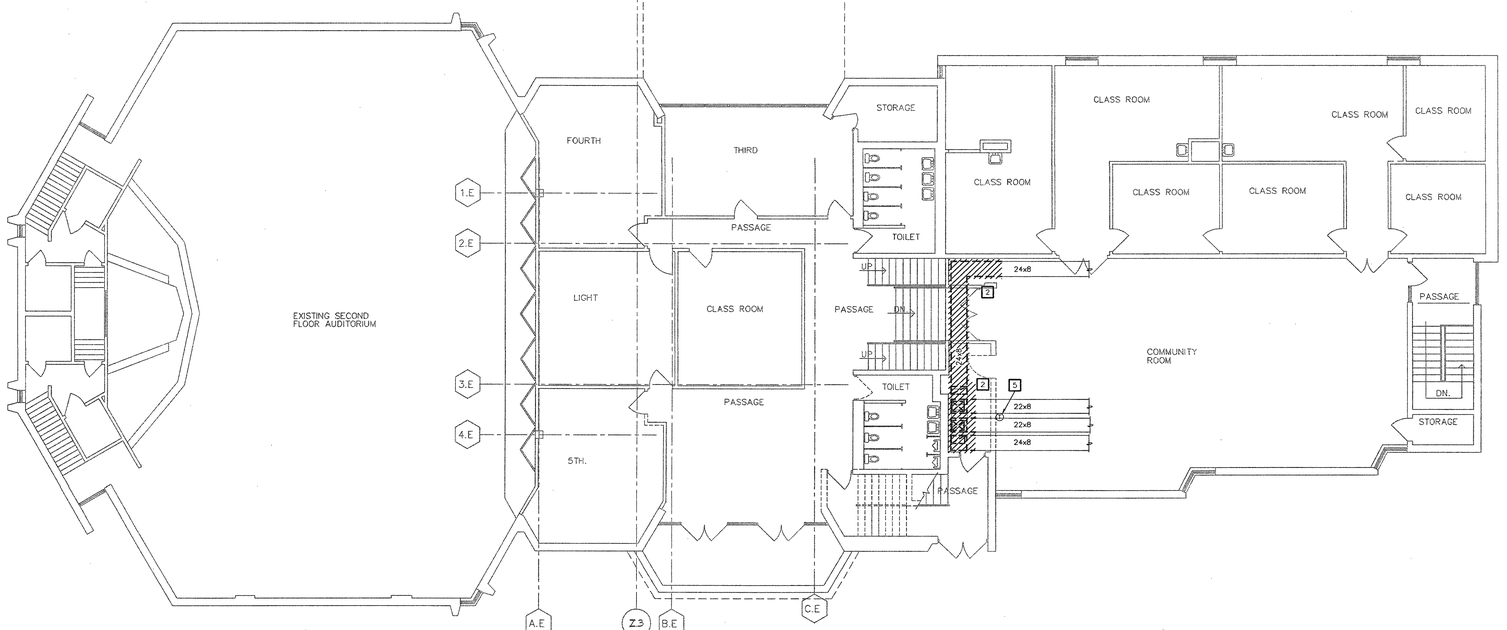

MECHANICAL SECOND FLOOR DEMOLITION PLAN

SCALE: 1/8" = 1' - 0"

THE SEAL AND SIGNATURES APPLY ONLY TO THE DOCUMENT TO WHICH THEY ARE AFFIXED AND EXPRESSLY DISCLAIM ANY RESPONSIBILITY FOR ALL OTHER PLANS, SPECIFICATIONS, ESTIMATES, REPORTS, OR OTHER DOCUMENTS OR INSTRUMENTS RELATING TO OR INTENDED TO BE USED FOR ANY PART OR PARTS OF THE ARCHITECTURAL OR ENGINEERING PROJECT.

J:\2001\01239\mech\01239MD1_1.dwg

Fletcher:: Architects, Inc.

ARCHITECTURE ▪ PLANNING ▪ INTERIORS
1906 NORTH SIGNAL HILLS DRIVE
KIRKWOOD, MO. 63122
TEL. (314) 965-6333
FAX. (314) 965-8997
info@fletcher-architects.com

CONSULTANTS

CIVIL ENGINEER:
FRONTENAC ENGR. GROUP, INC.
16 SUNNEN DR.
ST. LOUIS, MO 63143
PHONE (314) 644-2200
FAX (314) 644-0645

STRUCT. ENGINEER:
ABS CONSULTING
1844 LACKLAND HILLS PARKWAY
ST. LOUIS, MO 63146
PHONE (314) 994-7007
FAX (314) 994-0722

M.E.P. ENGINEER:
SSC ENGINEERING
550 SPIRIT OF ST. LOUIS BLVD.
CHESTERFIELD, MO 63005
PHONE (636) 530-7770
FAX (636) 530-7877

HARDWARE CONSULTANT
8710
5555 PIERRE CT.
ST. LOUIS, MO 63128
PHONE (314) 487-7776
FAX (314) 842-2242

KITCHEN CONSULTANTS
THE GEIGER GROUP
3501 WATSON ROAD
ST. LOUIS, MO 63139
PHONE (314) 645-2987
FAX (314) 645-3208

LANDSCAPE ARCHITECT
AUSTIN TAO. AND ASSOC.
2101 LOCUST, 2ND. FLOOR
ST. LOUIS, MO 63103
PHONE (314) 436-3999
FAX (314) 436-9130

INTERIOR DESIGN
OTOOLE DESIGN ASSOC.
124 WEST JEFFERSON
KIRKWOOD, MO 63122
PHONE (314) 909-1905
FAX (314) 909-1906

PROJECT:
ADDITION AND RENOVATIONS TO
McKnight Road
Church of Christ
2515 SOUTH MCKNIGHT ROAD
ST. LOUIS, MO 63124

THE SEAL AND SIGNATURES APPLY ONLY TO THE DOCUMENT TO WHICH THEY ARE AFFIXED, AND WE EXPRESSLY DISCLAIM ANY RESPONSIBILITY FOR ALL OTHER PLANS, SPECIFICATIONS, ESTIMATES, REPORTS, OR OTHER DOCUMENTS OR INSTRUMENTS RELATING TO OR INTENDED TO BE USED FOR ANY PART OR PARTS OF THE PROJECT.

COPYRIGHT 2002 FLETCHER ARCHITECTS, INC.

NO	DATE	REVISIONS
	00/00/01	ADDENDUM #0

PROJECT NO. 2001239
DRAWN BY: JW
CHECKED BY: SAH
DATE: NOVEMBER 1, 2002

SHEET NO. **MD1.1**

CONSTRUCTION/BID DRAWINGS

SSC Swim, Schuchat, & Cornett Engineering, Inc.
16207 Edison Avenue Chesterfield, Missouri 63005 (636) 530-7770 Fax# (636) 530-7877

MECHANICAL NOTES:

1. DUCT DIMENSIONS SHOWN ARE INSIDE FREE AREA DIMENSIONS. FOR THOSE DUCTS WITH LINER, THE DIMENSIONS MUST BE INCREASED TO ALLOW FOR THE LINER.

MECHANICAL KEYED NOTES:

1. EXTEND DUCTWORK IN EXISTING LOBBY TO NEW DIFFUSER LOCATIONS IN NEW CEILING. REUSE EXISTING DIFFUSERS.
2. RELOCATE SUPPLY AND EXHAUST DIFFUSERS IN TOILET ROOMS. ADJUST DUCTWORK ACCORDINGLY.
3. ALL EXPOSED DUCTWORK IN FELLOWSHIP HALL TO BE MILL PHOSPHATIZED AND PAINTED. COLOR TO BE SELECTED BY ARCHITECT. INSTALL DUCTWORK THROUGH EXTERIOR WALL ABOVE ROOF OF ADJACENT SPACE. INSTALL B.O.D. AT 25" AFF.
4. ROUTE DUCT FROM HOOD UP TO EXHAUST FAN, EF-4 ON ROOF. COORDINATE WITH KITCHEN SUPPLIER. SEE KITCHEN EQUIPMENT DRAWINGS FOR HOOD INFORMATION.
5. PROVIDE NEW EXHAUST FAN, EF-3 IN WOMEN'S TOILET. TERMINATE THROUGH EXTERIOR WALL WITH BRICK VENT.
6. ROUTE GAS LINE TO WATER HEATER, GWH-1 AND CONNECT. SEE DETAIL SHEET P2.1.
7. CONNECT NEW SUPPLY AIR DEVICE TO EXISTING DUCTWORK IN LOBBY AREA.
8. CONNECT EXHAUST AIR DEVICE IN NEW ELEVATOR EQUIPMENT ROOM TO EXISTING EXHAUST DUCT UP TO SECOND FLOOR. CONTROL EXHAUST FAN WITH NEW THERMOSTAT. M.C. TO PROVIDE THERMOSTAT. THERMOSTAT TO BE WIRED BY E.C.
9. ALL EXPOSED DUCTWORK AND DIFFUSERS IN ACTIVITY ROOM TO BE MILL PHOSPHATIZED AND PAINTED. COLOR TO BE SPECIFIED BY ARCHITECT.
10. ELECTRIC CABINET HEATERS RECESSED IN CEILING. PROVIDE ADDITIONAL T-BARS AS NECESSARY. M.C. TO PROVIDE THERMOSTAT ON WALL. THERMOSTAT TO BE WIRED BY E.C.
11. INSTALL TRANSFER GRILLE ON WALL AT 6" AFF.
12. REROUTE EXHAUST DUCT THROUGH NEW CEILING AND UP THROUGH ROOF. PROVIDE GOOSENECK.
13. PROVIDE RELIEF HOOD ON ROOF.

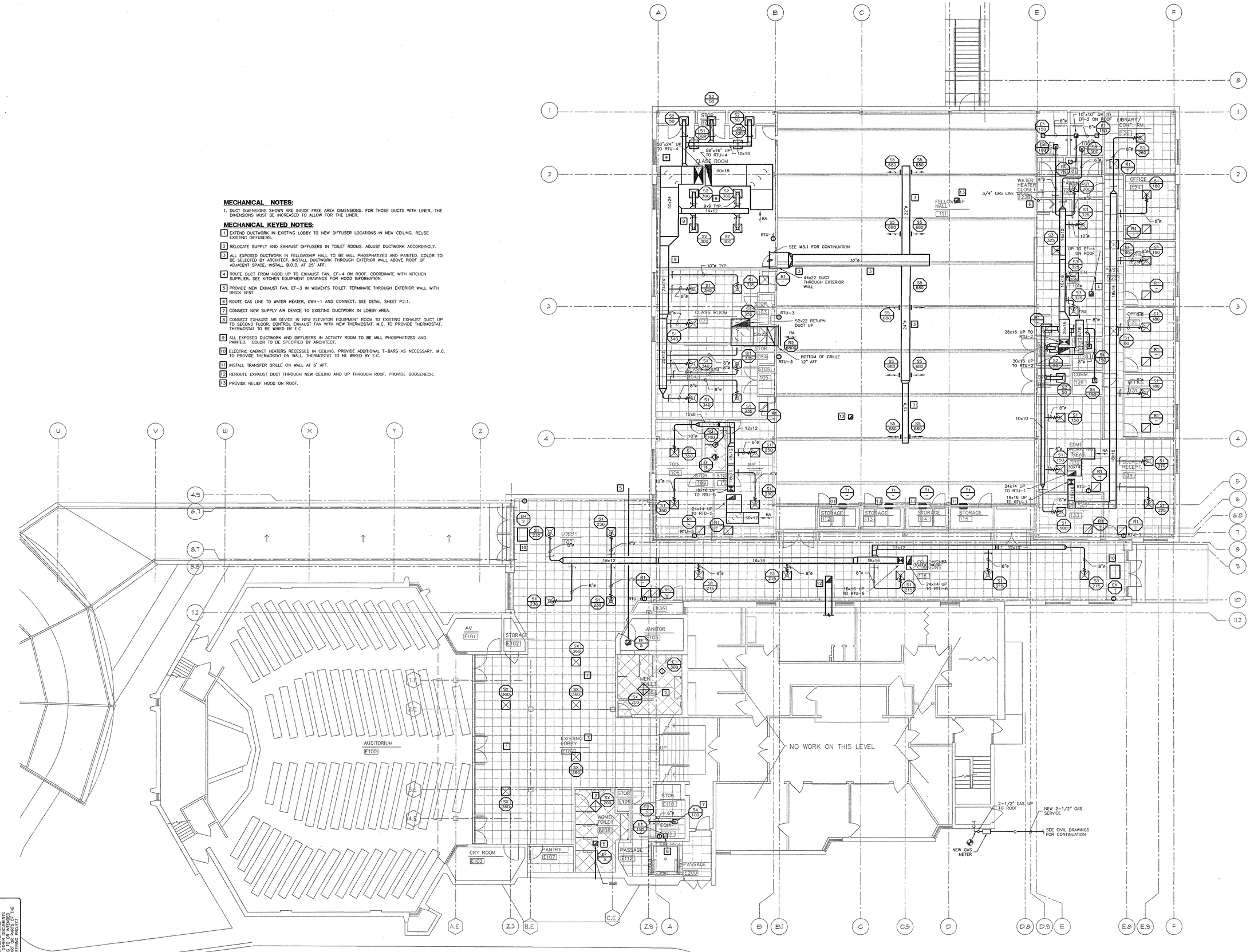

MECHANICAL FIRST FLOOR PLAN
SCALE: 1/8" = 1' - 0"

THE SEAL AND SIGNATURE APPLY ONLY TO THE DOCUMENT TO WHICH THEY ARE AFFIXED, AND ARE NOT TO BE CONSIDERED APPLICABLE TO ANY REVISIONS OR FOR ALL OTHER PLANS, SPECIFICATIONS, REPORTS OR OTHER DOCUMENTS OR INSTRUMENTS RELATING TO OR INTENDED TO BE USED FOR ANY PART OR PARTS OF THE PROJECT UNLESS THE ARCHITECT HAS SPECIFICALLY AGREED TO SUCH USE IN WRITING AND ADAPTED THE PLANS FOR SUCH USE.

Fletcher:: Architects, Inc.
ARCHITECTURE ■ PLANNING ■ INTERIORS
1906 NORTH SIGNAL HILLS DRIVE
KIRKWOOD, MO. 63122
TEL. (314) 965-6333
FAX. (314) 965-8997
info@fletcher-architects.com

CONSULTANTS

CIVIL ENGINEER:
FRONTENAC ENGR. GROUP, INC.
16 SUNNEN DR.
ST. LOUIS, MO 63143
PHONE (314) 644-2200
FAX (314) 644-0645

STRUCT. ENGINEER:
ABS CONSULTING
1844 LACKLAND HILLS PARKWAY
ST. LOUIS, MO 63146
PHONE (314) 994-7007
FAX (314) 994-0722

M.E.P. ENGINEER:
SSC ENGINEERING
550 SPIRIT OF ST. LOUIS BLVD.
CHESTERFIELD, MO 63005
PHONE (636) 530-7770
FAX (636) 530-7877

HARDWARE CONSULTANT
B710
5555 PIERRE CT.
ST. LOUIS, MO 63128
PHONE (314) 487-7776
FAX (314) 842-2242

KITCHEN CONSULTANTS
THE GEIGER GROUP
3501 WATSON ROAD
ST. LOUIS, MO 63139
PHONE (314) 645-2987
FAX (314) 645-3208

LANDSCAPE ARCHITECT
AUSTIN TAO, AND ASSOC.
2101 LOCUST, 2ND. FLOOR
ST. LOUIS, MO 63103
PHONE (314) 436-3999
FAX (314) 436-9130

INTERIOR DESIGN
OTOOLE DESIGN ASSOC.
124 WEST JEFFERSON
KIRKWOOD, MO 63122
PHONE (314) 909-1905
FAX (314) 909-1906

PROJECT:
ADDITION AND RENOVATIONS TO
McKnight Road
Church of Christ
2515 SOUTH MCKNIGHT ROAD
ST. LOUIS, MO 63124

THE SEAL AND SIGNATURES APPLY ONLY TO THE DOCUMENT TO WHICH THEY ARE AFFIXED AND WE EXPRESSLY DISCLAIM ANY RESPONSIBILITY FOR ALL OTHER PLANS, SPECIFICATIONS, ESTIMATES, REPORTS, OR OTHER DOCUMENTS OR INSTRUMENTS RELATING TO OR INTENDED TO BE USED FOR ANY PART OR PARTS OF THE PROJECT.

COPYRIGHT 2002 FLETCHER ARCHITECTS, INC.

NO	DATE	REVISIONS
	00/00/01	ADDENDUM #0

PROJECT NO. 2001239
DRAWN BY: JW
CHECKED BY: SAH
DATE: NOVEMBER 1, 2002

SHEET NO. **M1.1**

CONSTRUCTION/BID DRAWINGS

SSC Swim, Schuchat, & Cornett Engineering, Inc.
16207 Edison Avenue Chesterfield, Missouri 63005 (636) 530-7770 Fax# (636) 530-7877

MECHANICAL GENERAL NOTES:

1. DUCT DIMENSION SHOWN ARE INSIDE FREE AREA DIMENSIONS. FOR THOSE DUCTS WITH LINER, THE DIMENSIONS MUST BE INCREASED TO ALLOW FOR THE LINER.

MECHANICAL KEYED NOTES:

1 EXTEND NEW DUCTWORK FROM NEW RTU-7 AND RTU-8 TO EXISTING DUCTWORK AT COMMUNITY ROOM AREA. CONNECT NEW DUCTWORK TO EXISTING DUCTWORK ABOVE CEILING.

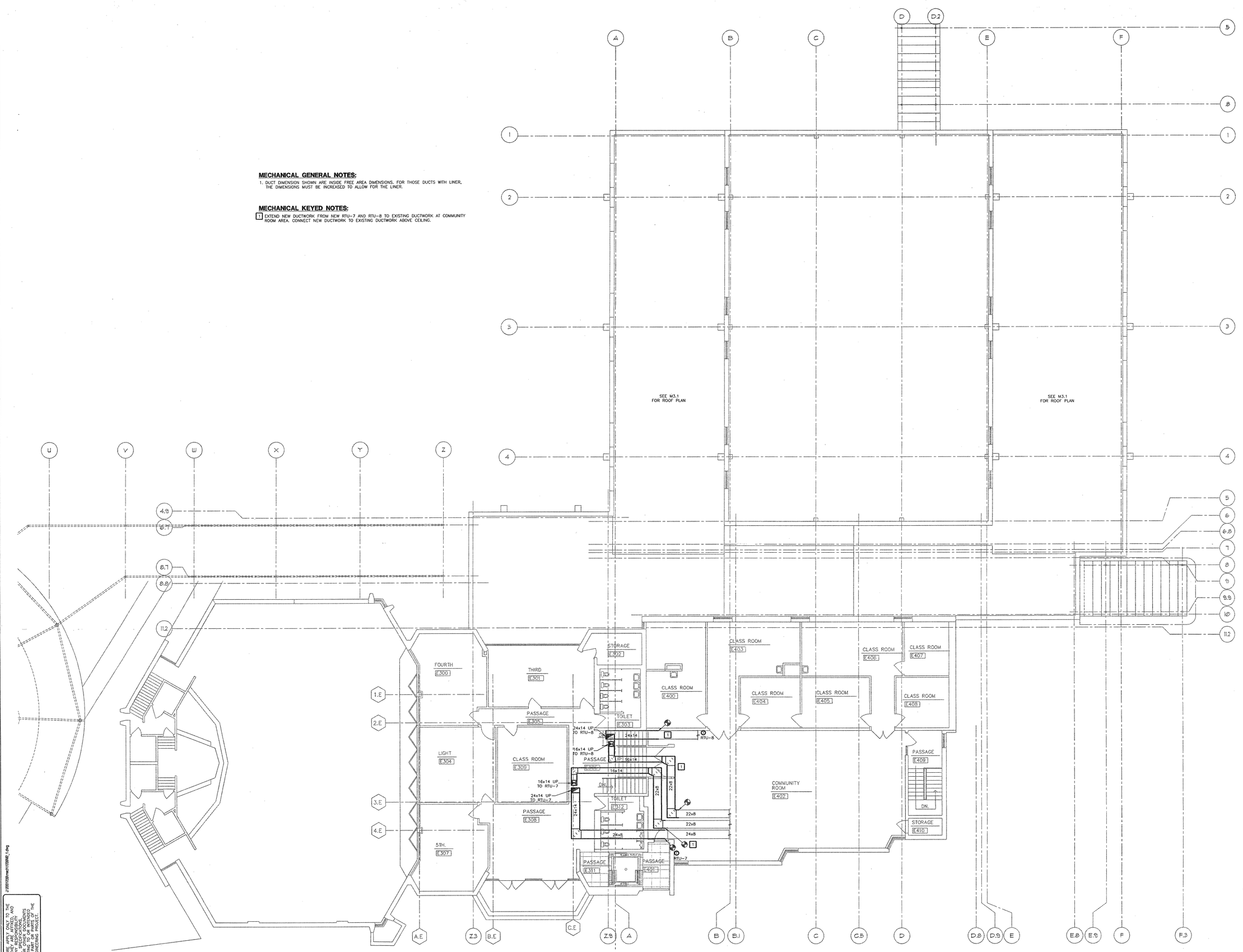

MECHANICAL SECOND FLOOR PLAN

SCALE: 1/8" = 1' - 0"

Fletcher:: Architects, Inc.

ARCHITECTURE ■ PLANNING ■ INTERIORS
1906 NORTH SIGNAL HILLS DRIVE
KIRKWOOD, MO. 63122
TEL. (314) 965-6333
FAX. (314) 965-8997
info@fletcher-architects.com

CONSULTANTS

CIVIL ENGINEER:
FRONTENAC ENGR. GROUP, INC.
16 SUNNEN DR.
ST. LOUIS, MO 63143
PHONE (314) 644-2200
FAX (314) 644-0645

STRUCT. ENGINEER:
ABS CONSULTING
1844 LADKLAND HILLS PARKWAY
ST. LOUIS, MO 63146
PHONE (314) 994-7007
FAX (314) 994-0722

M.E.P. ENGINEER:
SSC ENGINEERING
550 SPIRIT OF ST. LOUIS BLVD.
CHESTERFIELD, MO 63005
PHONE (636) 530-7770
FAX (636) 530-7877

HARDWARE CONSULTANT
8710
5555 PIERRE CT.
ST. LOUIS, MO 63128
PHONE (314) 487-7776
FAX (314) 842-2242

KITCHEN CONSULTANTS
THE GEIGER GROUP
3501 WATSON ROAD
ST. LOUIS, MO 63139
PHONE (314) 645-2987
FAX (314) 645-3208

LANDSCAPE ARCHITECT
AUSTIN TAO. AND ASSOC.
2101 LOCUST, 2ND. FLOOR
ST. LOUIS, MO 63103
PHONE (314) 436-3999
FAX (314) 436-9130

INTERIOR DESIGN
OTOOLE DESIGN ASSOC.
124 WEST JEFFERSON
KIRKWOOD, MO 63122
PHONE (314) 909-1905
FAX (314) 909-1906

PROJECT:
ADDITION AND RENOVATIONS TO
McKnight Road
Church of Christ
2515 SOUTH MCKNIGHT ROAD
ST. LOUIS, MO 63124

THE SEAL AND SIGNATURES APPLY ONLY TO THE DOCUMENT TO WHICH THEY ARE AFFIXED, AND WE EXPRESSLY DISCLAIM ANY RESPONSIBILITY FOR ALL OTHER PLANS, SPECIFICATIONS, ESTIMATES, REPORTS, OR OTHER DOCUMENTS OR INSTRUMENTS RELATING TO OR INTENDED TO BE USED FOR ANY PART OR PARTS OF THE PROJECT.

COPYRIGHT 2002 FLETCHER ARCHITECTS, INC.

NO	DATE	REVISIONS
	02/03/01	ADDENDUM #0

PROJECT NO. 2001239
DRAWN BY: JW/MEG
CHECKED BY: SAH
DATE: NOVEMBER 1, 2002

SHEET NO. **M2.1**

CONSTRUCTION/BID DRAWINGS

SSC Swim, Schuchat, & Cornett Engineering, Inc.
18207 Edison Avenue Chesterfield, Missouri 63005 (636) 530-7770 Fax# (636) 530-7877

THE SEAL AND SIGNATURE APPLY ONLY TO THE DOCUMENT TO WHICH THEY ARE AFFIXED, AND WE EXPRESSLY DISCLAIM ANY RESPONSIBILITY FOR ALL OTHER PLANS, SPECIFICATIONS, ESTIMATES, REPORTS, OR OTHER DOCUMENTS OR INSTRUMENTS RELATING TO OR INTENDED TO BE USED FOR ANY PART OR PARTS OF THE PROJECT.

J:\2001239\mech\1139M2_1.dwg

MECHANICAL GENERAL NOTES:

1. PROVIDE CONDENSATE DRAIN TRAP AT EACH RTU, PER DETAIL SHEET M4.1 UNLESS UNIT HAS INTERNAL TRAP. ROUTE CONDENSATE DRAINS TO NEAREST SCUPPER.
2. ROUTE GAS PIPING TO EACH RTU, PROVIDE DRIP LEG. CONNECT PER DETAIL, SHEET M4.1.

MECHANICAL KEYED NOTES:

1. INSTALL SUPPLY DUCTWORK FOR FELLOWSHIP HALL ON ROOF. ROUTE RECTANGULAR DUCTWORK THROUGH EXTERIOR WALL OF FELLOWSHIP HALL WALL. INSTALL DUCTWORK ON ROOF PER DETAIL, SHEET M4.1.
2. REMOVE EXISTING CONDENSING UNITS AND ASSOCIATED REFRIGERANT PIPING. PATCH ROOF TO MAINTAIN ROOF WARRANTY, COORDINATE WITH GENERAL CONTRACTOR.
3. REMOVE EXISTING FLUE FROM FURNACES BELOW. PATCH ROOF TO MAINTAIN ROOF WARRANTY. COORDINATE W/ GENERAL CONTRACTOR.
4. INSTALL RETURN DUCTWORK ON ROOF PER DETAIL ON SHEET M4.1. ROUTE THROUGH ROOF INTO CEILING BELOW.
5. INSTALL RELIEF HOOD ON ROOF.

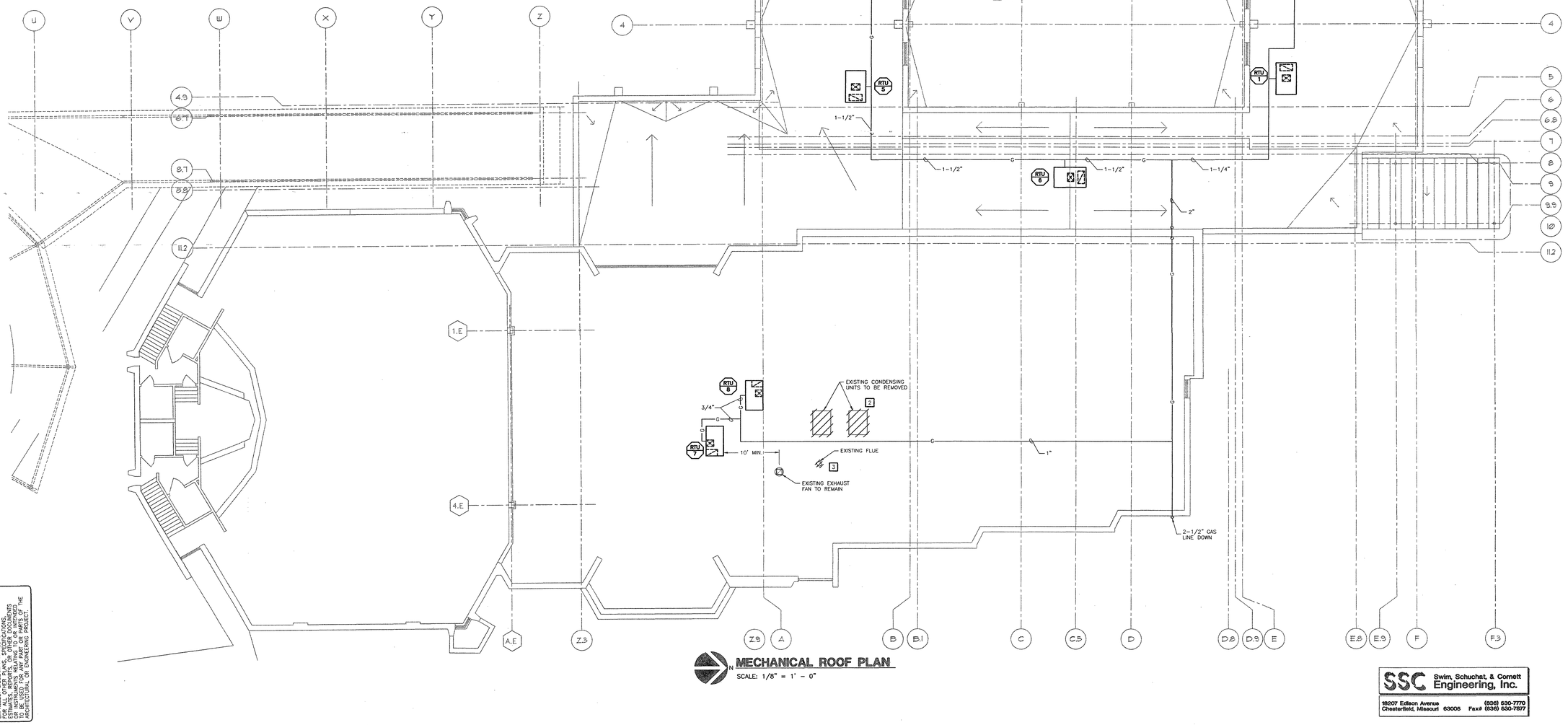

MECHANICAL ROOF PLAN

SCALE: 1/8" = 1' - 0"

Fletcher:: Architects, Inc.

ARCHITECTURE ■ PLANNING ■ INTERIORS
1906 NORTH SIGNAL HILLS DRIVE
KIRKWOOD, MO. 63122
TEL. (314) 965-6333
FAX. (314) 965-8997
info@fletcher-architects.com

CONSULTANTS

CIVIL ENGINEER:
FRONTENAC ENGR. GROUP, INC.
16 SUNNEN DR.
ST. LOUIS, MO 63143
PHONE (314) 644-2200
FAX (314) 644-0645

STRUCT. ENGINEER:
ABS CONSULTING
1844 LACKLAND HILLS PARKWAY
ST. LOUIS, MO 63146
PHONE (314) 994-7027
FAX (314) 994-0722

M.E.P. ENGINEER:
SSC ENGINEERING
550 SPIRIT OF ST. LOUIS BLVD.
CHESTERFIELD, MO 63005
PHONE (636) 530-7770
FAX (636) 530-7877

HARDWARE CONSULTANT
8710
5555 PIERRE CT.
ST. LOUIS, MO 63128
PHONE (314) 487-7776
FAX (314) 842-2242

KITCHEN CONSULTANTS
THE GEIGER GROUP
3501 WATSON ROAD
ST. LOUIS, MO 63139
PHONE (314) 645-2987
FAX (314) 645-3208

LANDSCAPE ARCHITECT
AUSTIN TAO. AND ASSOC.
2101 LOCUST, 2ND. FLOOR
ST. LOUIS, MO 63103
PHONE (314) 436-3999
FAX (314) 436-9130

INTERIOR DESIGN
OTOOLE DESIGN ASSOC.
124 WEST JEFFERSON
KIRKWOOD, MO 63122
PHONE (314) 909-1905
FAX (314) 909-1906

PROJECT:
ADDITION AND RENOVATIONS TO
McKnight Road
Church of Christ
2515 SOUTH MCKNIGHT ROAD
ST. LOUIS, MO 63124

THE SEAL AND SIGNATURES APPLY ONLY TO THE DOCUMENT TO WHICH THEY ARE AFFIXED, AND WE EXPRESS NO OPINION AS TO ANY OTHER PLANS, SPECIFICATIONS, ESTIMATES, REPORTS, OR OTHER DOCUMENTS OR INSTRUMENTS RELATING TO OR INTENDED TO BE USED FOR ANY PART OR PARTS OF THE PROJECT.

COPYRIGHT 2002 FLETCHER ARCHITECTS, INC.

NO	DATE	REVISIONS
	00/00/01	ADDENDUM #0

PROJECT NO. 2001239
DRAWN BY: JW/MEG
CHECKED BY: SAH
DATE: NOVEMBER 1, 2002

SHEET NO. **M3.1**

CONSTRUCTION/BID DRAWINGS

SSC Swim, Schuchat, & Cornett Engineering, Inc.
18207 Edison Avenue Chesterfield, Missouri 63005 (636) 530-7770 Fax# (636) 530-7877

THE SEAL AND SIGNATURE APPLY ONLY TO THE DOCUMENT TO WHICH THEY ARE AFFIXED, AND WE EXPRESS NO OPINION AS TO ANY OTHER PLANS, SPECIFICATIONS, ESTIMATES, REPORTS, OR OTHER DOCUMENTS OR INSTRUMENTS RELATING TO OR INTENDED TO BE USED FOR ANY PART OR PARTS OF THE PROJECT OR ANY DERIVATIVE OR DERIVATIVE PROJECT.

J:\2001239\mech\123900_1.dwg

ROOF TOP UNIT SCHEDULE

MARK	MANUFACTURER	MODEL NO.	AREA SERVED	SUPPLY FAN CFM	SUPPLY FAN O.A. CFM	SUPPLY FAN ESP INCHES H2O	SUPPLY FAN HP	COOLING (MBH) TOT.	COOLING (MBH) SENS.	EAT DB/WB	NAT. GAS (MBH) IN	NAT. GAS (MBH) OUT	ELECTRICAL V/PH/H	ELECTRICAL COMPRESSOR RLA	ELECTRICAL FLA COND. FAN	ELECTRICAL SUP FAN	ELECTRICAL MCA	REMARKS
RTU-1	TRANE	YSC-060	NORTH OFFICES	1680	200	.5	1	56.8	47.1	82/67	60	48	208/3/60	18.6	2.0	6.2	31.50	3
RTU-2	TRANE	YSC-072	KITCHEN	2400	650	1.0	1.5	71.0	49.8	80/67	120	97	208/3/60	18.6	3.9	5.0	32.2	2,3
RTU-3	TRANE	YCD-36	FELLOWSHIP HALL	9000	2715	1.0	7.5	358.9	237.9	82/70	350	283	208/3/60	2062.8	307.0	19.6	182.0	1,2,3,4
RTU-4	TRANE	YCD-15	ACTIVITY/CLASS	4500	1380	1.2	2.5	159.6	99.7	85/72	150	122	208/3/60	2021.3	203.2	10.6	65.0	2,3
RTU-5	TRANE	YSC-048	INF./TODDLER	1280	500	1.0	1.0	54.1	34.2	87/73	60	48	208/3/60	14.60	2.0	3.6	23.90	1
RTU-6	TRANE	YSC-060	FELLOWSHIP CMNS.	1995	100	1.0	1.0	57.5	51.4	80/67	60	48	208/3/60	18.6	2.0	6.2	31.50	1
RTU-7	TRANE	YSC-048	EXISTING AREA	1600	360	1.0	1.0	49.2	37.9	80/67	120	96	208/3/60	14.6	2.0	5.0	23.9	1
RTU-8	TRANE	YSC-048	EXISTING AREA	1600	360	1.0	1.0	49.2	37.9	80/67	120	96	208/3/60	14.6	2.0	5.0	23.9	1

1. PROVIDE FARR 30/30 FILTERS.
2. PROVIDE TWO STAGE GAS CONTROLS.
3. PROVIDE DISCONNECT.
4. ROOFTOP UNIT SHALL HAVE SIDE SUPPLY AIR DISCHARGE AND SIDE RETURN.

EXHAUST FAN SCHEDULE

MARK	MANUFACTURER	MODEL NO.	LOCATION	CFM	SP	SONE	VOLTS/PH	HP	WATTS	REMARKS
EF-1	GREENHECK	SP-9	CEILING	150	.25	3.6	120/1	–	129	1
EF-2	GREENHECK	G-095	ROOF	375	.25	4.5	120/1	1/30	–	2
EF-3	GREENHECK	SP-228	CEILING	300	.2	5.7	120/1	–	135	1
EF-4	CAPTIVE-AIRE	NCA14FA	ROOF	1500	.5	–	120/1	1/2		2,3
EF-5	GREENHECK	SP-7	CEILING	75	.25	2.3	120/1	–	80	1

1. CEILING EXHAUST FAN KIT WITH GRILLE.
2. WITH ROOF CURB
3. KITCHEN EXHAUST FAN. FAN SHALL BE UL762 LISTED. PROVIDE GREASE BOX.

ELECTRIC HEATER SCHEDULE (WALL/CEILING)

MARK	MANUFACTURER	MODEL NO.	LOCATION	KW	VOLT/PH	SIZE	REMARKS
EH-1	BRASCH	C304L-41RC	VESTIBULE	1.25	120/1	36.5"x27.5"	1,2,3,4
EH-2	BRASCH	C304L-41RC	VESTIBULE	1.25	120/1	36.5"x27.5"	1,2,3,4

1. CEILING RECESSED.
2. WITH WALL MOUNTED THERMOSTAT FURNISHED BY M.C. AND WIRED BY E.C.
3. COLOR TO BE SPECIFIED BY ARCHITECT.
4. WITH DISCONNECT.

P.A.S. AIR DEVICE RUNOUT SCHEDULE

DUCT CFM	DUCT SIZE
0 – 100	6" ROUND
101 – 200	8" ROUND
201 – 300	10" ROUND
301 – 400	12" ROUND
401 – 500	14" ROUND
501 – 600	16" ROUND

GENERAL NOTES:
1. AIR DEVICE NECK SIZE SHALL BE THE SAME AS RUNOUT SIZE.
2. RECTANGULAR DUCT SIZES OR EQUIVALENT FREE AREA MAY BE SUBSTITUTED FOR ROUND DUCT.
3. RUNOUTS MAY BE RIGID OR FLEX DUCT PER SPECIFICATIONS.
4. CRITERIA: NC30 OR $\Delta P \leq 0.1$.

T.D.C. AIR DEVICE RUNOUT SCHEDULE

DUCT CFM	DUCT SIZE
0 – 150	6" ROUND
151 – 275	8" ROUND
276 – 350	10" ROUND
351 – 500	12" ROUND
501 – 700	14" ROUND
701 – 950	16" ROUND

GENERAL NOTES:
1. AIR DEVICE NECK SIZE SHALL BE THE SAME AS RUNOUT SIZE.
2. RECTANGULAR DUCT SIZES OR EQUIVALENT FREE AREA MAY BE SUBSTITUTED FOR ROUND DUCT.
3. RUNOUTS MAY BE RIGID OR FLEX DUCT PER SPECIFICATIONS.
4. CRITERIA: 18x18, $\Delta P = 0.1$

AIR DEVICE SCHEDULE

PLAN MARK	MANUFACTURER	MODEL	MATL.	NECK SIZE	FRAME TYPE	PANEL SIZE	REMARKS
S1	TITUS	TDC	STL	SCHED	LAY-IN	24"x24"	1
S2	TITUS	TDC	STL	9x9	–	24"x24"	4
S3	TITUS	PAS	ALUM	SCHED	LAY-IN	24"x24"	1
S4	TITUS	PAS	ALUM	SCHED	HARD	12"X12"	1
S5	TITUS	DL	STL	–	–	18"X6"	3
SX	EXISTING	–	–	–	–	–	5
R1	TITUS	PAR	ALUM	SCHED	LAY-IN	24"x24"	2
E1	TITUS	350 FL	ALUM	SCHED	HARD	12"x12"	–
EX	EXISTING	–	–	–	–	–	5
T1	TITUS	350FL	STL	–	–	12"X6"	6

1. 4 WAY DIFFUSER.
2. RETURN GRILLE TO PLENUM.
3. HIGH VELOCITY DIFFUSER ON EXPOSED DUCTWORK. SEE DETAIL.
4. DIFFUSER TO BE PAINTED TO MATCH DUCTWORK. COLOR TO BE SELECTED BY ARCH.
5. EXISTING AIR DEVICE TO BE REUSED.
6. TRANSFER GRILLE.

FIRE DAMPER SCHEDULE

PLAN MARK	MANUF.	MODEL	HORZ. OR VERT. DUCT	DUCT SIZE	RATING	REMARKS
FD-1	RUSKIN	IBD 2-LR	H	6"ø	2 HR	–

MECHANICAL SYMBOLS LEGEND

T	THERMOSTAT
	90 DEGREE ELBOW DOWN, ROUND DUCT
	90 DEGREE ELBOW UP, ROUND DUCT
	ROUND DUCT OFFSET
	ROUND RADIUS ELBOW
	90 DEGREE ELBOW DOWN, RECT. SUPPLY DUCT
	90 DEGREE ELBOW UP, RECTANGULAR SUPPLY DUCT
	90 DEGREE ELBOW DOWN, RECT. RETURN DUCT
	90 DEGREE ELBOW UP, RECTANGULAR RETURN DUCT
	RECTANGULAR ELBOW WITH TURNING VANES
	FLEXIBLE DUCT
	VOLUME DAMPER
M	MOTORIZED DAMPER
F	FIRE DAMPER
	CEILING SUPPLY AIR DIFFUSER
	CEILING RETURN AIR GRILLE
	SIDEWALL RETURN AIR GRILLE
	SIDEWALL SUPPLY AIR DIFFUSER
	SUPPLY AIR SLOT DIFFUSER
	ROUND TAP IN BOTTOM OF DUCT
	RECTANGULAR TAP IN BOTTOM OF DUCT
	CONNECTION OF NEW TO EXISTING
D	CONDENSATE DRAIN
	PIPE TURNING DOWN
	PIPE TURNING UP
	BALL VALVE
	FLOW CONTROL
	GATE VALVE
	PRESSURE RELIEF VALVE
	CHECK VALVE
	GAS COCK
	UNION
	PRESSURE GAUGE
	SUPPLY AIR DUCT
	RETURN AIR DUCT
CFM	EXHAUST AIR DUCT

PIPE HANGER DETAILS
NO SCALE

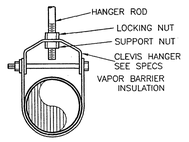

APPLICABLE FOR:
a) GAS

EXHAUST BRANCH CONNECTION TO MAIN
NO SCALE

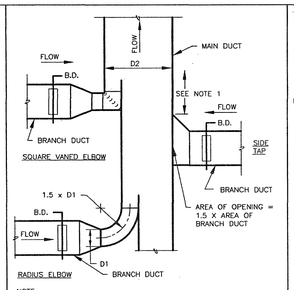

NOTE:
1. BRANCH DUCTS MUST BE 2 X D2 UPSTREAM OF ELBOW.

INSULATED DUCT THROUGH OUTSIDE WALL
NO SCALE

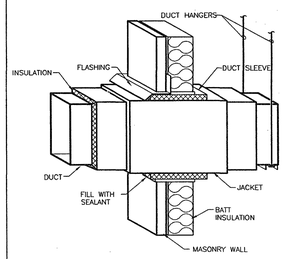

PIPE HANGER DETAILS
NO SCALE

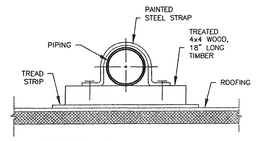

SUPPORT SPACING:
RIGID 1" AND UNDER – 6'
RIGID 1-1/4" AND OVER – 10'
TUBING 1-1/4" AND UNDER – 4'
TUBING 1-1/2" AND OVER – 10'

STEEL STRAP SIZES:
1/8" X 1-1/8" FOR 3/4" TO 1-1/4" PIPE.
3/16" X 1-3/4" FOR 1-1/2" TO 2" PIPE.
3/16" X 1-3/4" FOR 2-1/2" TO 4" PIPE.

EXHAUST BRANCH CONNECTION TO MAIN
NO SCALE

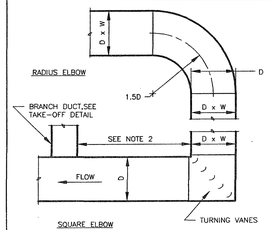

NOTES:
1. UNLESS SPECIFICALLY NOTED OTHERWISE, DETAIL APPLIES TO ALL SUPPLY, ALL EXHAUST, AND ALL RETURN AIR ELBOWS.
2. BRANCH DUCT TAKE-OFFS MUST BE A MINIMUM OF 4D DOWNSTREAM OF EITHER TYPE OF ELBOW, AND NOT LESS THAN 3D UPSTREAM.

INSULATED DUCT THROUGH OUTSIDE WALL
NO SCALE

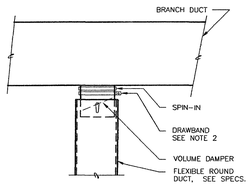

NOTES:
1. THIS DETAIL IS APPLICABLE FOR FLEXIBLE ROUND DUCT TAKE-OFFS FROM BRANCH DUCTS TO DIFFUSERS.
2. FLEXIBLE DUCT INSULATION SHALL TERMINATE AT SIDE OF BRANCH DUCT SO NO UNINSULATED METAL PARTS ARE EXPOSED.

ROOF MOUNTED EXHAUST FAN
NO SCALE

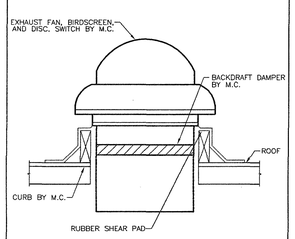

GAS PIPING SUPPORT ON ROOF DETAIL
NO SCALE

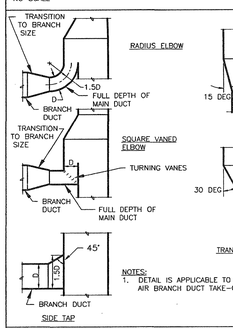

NOTES:
1. DETAIL IS APPLICABLE TO SUPPLY AIR BRANCH DUCT TAKE-OFFS.

DUCT ELBOW
NO SCALE

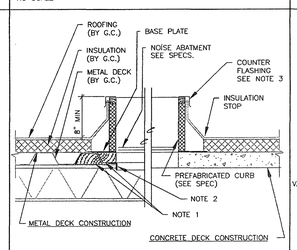

NOTES:
1. REINFORCE METAL DECK WITH TIGHTLY FIT WOOD BLOCKING.
2. ANGLE IRON FRAME
3. IF THE SUPPORTED EQUIPMENT HAS BUILT-IN COUNTER FLASHING, THEN THE COUNTER FLASHING SHOWN ABOVE IS NOT REQUIRED.

FLEXIBLE DUCT CONNECTION TO BRANCH
NO SCALE

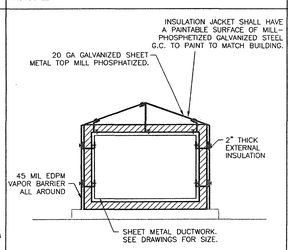

1. SEAL VAPOR BARRIER SEAMS PER MANUFACTURERS INSTRUCTIONS TO PROVIDE WATERPROOF SEAL.
2. SEAL BETWEEN METAL TOP & WALL TO PREVENT RAIN FROM RUNNING DOWN WALL.
3. EXTEND METAL TOP FROM WALL TO RTU.
4. PAINT METAL TOP TO MATCH RTU.
5. SUPPORT METAL TOP TO DUCT ON 16" CENTERS (MAX).

ROOF MOUNTED EXHAUST FAN
NO SCALE

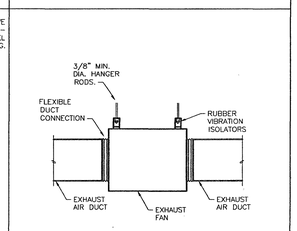

BRANCH DUCT TAKEOFFS AND TRANSITIONS
NO SCALE

CURB DETAIL - TYPE A
NO SCALE

EXTERIOR DUCT INSTALLATION ON ROOF DETAIL
NO SCALE

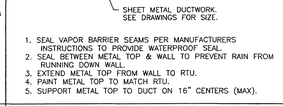

NOTES:
1. REMOVE FUSIBLE LINK AND TEST DAMPER FOR CORRECT OPERATION AFTER INSTALLATION.
2. FIRE WALL CONSTRUCTION VARIES. THIS CONTRACTOR SHALL INFORM THE GENERAL CONTRACTOR OF FIRE DAMPER OPENING SIZE AND LOCATION TO INSURE THAT PROPER OPENING FRAMING IS PROVIDED.
3. THE MINIMUM SLEEVE GAGE SHALL BE 16 GAGE GALVANIZED FOR DAMPERS WITH DIMENSIONS NOT EXCEEDING 24" IN HEIGHT OR 36" IN WIDTH, AND 14 GAGE FOR LARGER SIZES.
4. COMPLETED INSTALLATION SHALL BE IN COMPLIANCE WITH U.L. AND WITH MANUFACTURER'S INSTALLATION INSTRUCTIONS.
5. ATTACH DUCT TO FIRE DAMPER WITH A BREAKAWAY SLIP JOINT.

VERTICAL TYPE SHOWN, HORIZONTAL TYPE SIMILAR

INLINE EXHAUST FAN CONNECTION DETAIL
NO SCALE



TYPICAL SEISMIC BRACING FOR ROUND/OVAL DUCTS
NO SCALE

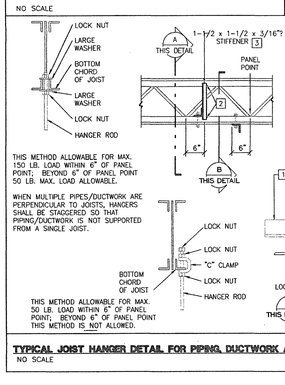

EXPOSED ROUND DUCT DETAIL - FELLOWSHIP HALL
NO SCALE

1. PROVIDE A SUPPORT ANGLE SPANNING TWO OR MORE JOISTS; 3 X 3 X 1/4" SUPPORT ANGLE WHERE JOIST SPACING IS OVER 2'-0" BUT NOT MORE THAN 4'-0". PROVIDE 2 X 2 X 1/4" SUPPORT ANGLE WHERE JOIST SPACING IS 2'-0" AND UNDER. WHERE LOAD EXCEEDS 500 POUNDS PER HANGER, SEE STRUCTURAL DRAWINGS FOR DETAILING.
2. FIELD WELD.
3. PROVIDE STIFFENER ANGLE WHERE LOAD BEING HUNG EXCEEDS 250 LBS.

SUPPORT ANGLES AND STIFFENERS TO BE SUPPLIED AND INSTALLED BY M.C.

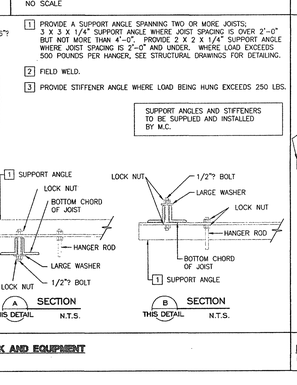

FIRE DAMPER DETAIL
NO SCALE

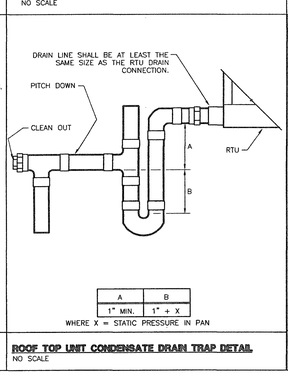

A	B
1" MIN.	1" + X

WHERE X = STATIC PRESSURE IN PAN

RETURN GRILLE DETAIL
NO SCALE

GENERAL
1. NO BRACING IS REQUIRED IF THE TOP OF THE DUCT OR PIPE IS SUSPENDED 12" OR LESS FROM THE SUPPORTING STRUCTURAL MEMBER. WALLS, INCLUDING DRYWALL CONSTRUCTION, MAY REPLACE REQUIRED BRACING IF ON VERTICAL RUNS. BRACING MUST NOT INTERFERE WITH ATTACHMENT TO STRUCTURAL MEMBERS. BRACING SHALL USE DEVICES INCLUDED IN FEDERAL SPECIFICATION WW-H-171 (MSS SP-58) OR BE BOLTED/WELDED AS APPROVED BY THE ENGINEER. BRACES SHALL BE CONNECTED TO THE HANGERS/SUPPORTS FOR DUCTS, PIPING AND SUSPENDED EQUIPMENT.
2. SEISMIC FORCES SHALL BE USED FOR REQUIRED STRENGTH OF BRACING.
3. LATERAL SEISMIC FORCE SHALL BE CONSIDERED TO ACT CONCURRENTLY WITH THE DEAD LOAD. THE SLENDERNESS RATIO (L/r) OF BRACES SHALL NOT EXCEED 200, WHERE (l) IS THE LENGTH OF BRACE AND (r) IS THE LEAST RADIUS OF GYRATION, BOTH IN INCHES.
4. SWAY BRACING METHODS SHOWN IN NFPA 13 (SPRINKLER PIPING) MAY BE USED IN LIEU OF DETAILS SHOWN ON THE DRAWINGS FOR PIPING OR DUCTWORK.
5. BRACE ALL GAS AND HIGH-HAZARD PIPING AND ALL FIRE SUPPRESSION PIPING.

DUCTWORK
1. BRACE ALL RECTANGULAR DUCT OF 6 sq.ft. CROSS SECTIONAL AREA AND LARGER. BRACE ALL ROUND/OVAL DUCTS 28"ø AND LARGER.
2. TRANSVERSE AND VERTICAL BRACING SHALL OCCUR AT 30 ft. INTERVALS, MAXIMUM. LONGITUDINAL BRACING SHALL OCCUR AT 60 ft. INTERVALS MAXIMUM.

PIPING
1. BRACE ALL PIPES 2-1/2"ø AND LARGER. IN MECHANICAL ROOMS BRACE ALL PIPING 1-1/4"ø AND LARGER.
2. TRANSVERSE AND VERTICAL BRACING SHALL OCCUR AT 40 ft. INTERVALS, MAXIMUM. LONGITUDINAL BRACING SHALL OCCUR AT 80 ft. INTERVALS, MAXIMUM.
3. AT PIPE RISERS, WHEREVER POSSIBLE, SUPPORT THE WEIGHT OF THE RISER AT A POINT OR POINTS ABOVE THE CENTER OF GRAVITY OF THE RISER.
4. DO NOT FASTEN ONE RIGID PIPING SYSTEM TO TWO DISSIMILAR PARTS OF THE BUILDING THAT MAY RESPOND IN A DIFFERENT MODE DURING AN EARTHQUAKE; FOR EXAMPLE, A WALL AND A ROOF.
5. DO NOT USE BRANCH LINES TO BRACE MAIN LINES.

EQUIPMENT
1. REFER TO SPECIFICATIONS SECTION 15020.

ROOFTOP UNIT GAS PIPING DETAIL
NO SCALE

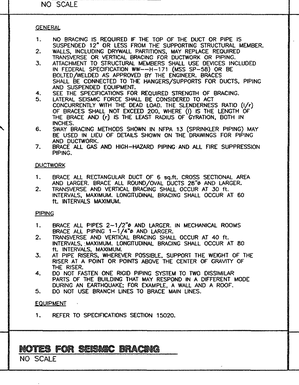

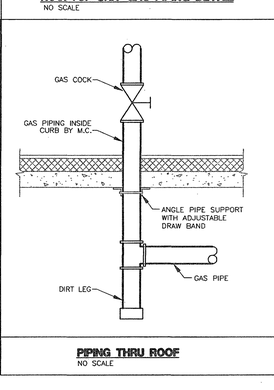

EXHAUST AIR DETAIL
NO SCALE

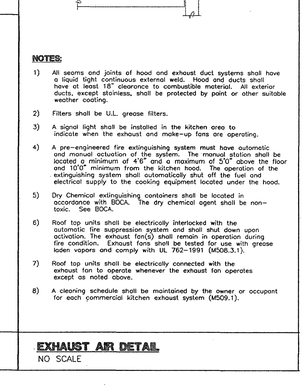

NOTES:
1) All seams and joints of hood and exhaust duct systems shall have a liquid tight continuous external weld. Hood and ducts shall have at least 18" clearance to combustible material. All exterior ducts, except stainless, shall be protected by paint or other suitable weather coating.
2) Filters shall be U.L. grease filters.
3) A signal light shall be installed in the kitchen area to indicate when the exhaust and make-up fans are operating.
4) A pre-engineered fire extinguishing system must have automatic and manual actuation of the system. The manual station shall be located a minimum of 4'6" and a maximum of 5'0" above the floor and 10'0" minimum from the kitchen hood. The operation of the extinguishing system shall automatically shut off the fuel and electrical supply to the cooking equipment located under the hood.
5) Dry Chemical extinguishing containers shall be located in accordance with BOCA. The dry chemical agent shall be non-toxic. See BOCA.
6) Roof top units shall be electrically interlocked with the automatic fire suppression system and shall shut down upon activation. The exhaust fan(s) shall remain in operation during fire condition. Exhaust fans shall be tested for use with grease laden vapors and comply with UL 762-1991 (M508.3.1).
7) Roof top units shall be electrically connected with the exhaust fan to operate whenever the exhaust fan operates except as noted above.
8) A cleaning schedule shall be maintained by the owner or occupant for each commercial kitchen exhaust system (M509.1).

BRANCH DUCT TAKEOFFS AND TRANSITIONS
NO SCALE

CURB DETAIL - TYPE A
NO SCALE

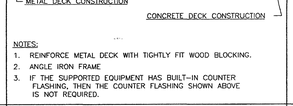

EXTERIOR DUCT INSTALLATION ON ROOF DETAIL
NO SCALE

INLINE EXHAUST FAN CONNECTION DETAIL
NO SCALE

TYPICAL JOIST HANGER DETAIL FOR PIPING, DUCTWORK AND EQUIPMENT
NO SCALE

ROOF TOP UNIT CONDENSATE DRAIN TRAP DETAIL
NO SCALE

NOTES FOR SEISMIC BRACING
NO SCALE

PIPING THRU ROOF
NO SCALE

EXHAUST AIR DETAIL
NO SCALE

Fletcher:: Architects, Inc.
ARCHITECTURE ■ PLANNING ■ INTERIORS
1906 NORTH SIGNAL HILLS DRIVE
KIRKWOOD, MO. 63122
TEL. (314) 965-6333
FAX. (314) 965-8997
info@fletcher-architects.com

CONSULTANTS

CIVIL ENGINEER:
FRONTENAC ENGR. GROUP, INC.
16 SUNNEN DR.
ST. LOUIS, MO 63143
PHONE (314) 644-2200
FAX (314) 644-0645

STRUCT. ENGINEER:
ABS CONSULTING
1844 LACKLAND HILLS PARKWAY
ST. LOUIS, MO 63146
PHONE (314) 994-7007
FAX (314) 994-0722

M.E.P. ENGINEER:
SSC ENGINEERING
550 SPIRIT OF ST. LOUIS BLVD.
CHESTERFIELD, MO 63005
PHONE (636) 530-7770
FAX (636) 530-7877

HARDWARE CONSULTANT
8710
5555 PIERRE CT.
ST. LOUIS, MO 63128
PHONE (314) 487-7776
FAX (314) 842-2242

KITCHEN CONSULTANTS
THE GEIGER GROUP
3501 WATSON ROAD
ST. LOUIS, MO 63139
PHONE (314) 645-2987
FAX (314) 645-3208

LANDSCAPE ARCHITECT
AUSTIN TAO AND ASSOC.
2101 LOCUST, 2ND. FLOOR
ST. LOUIS, MO 63103
PHONE (314) 436-3999
FAX (314) 436-9130

INTERIOR DESIGN
OTOOLE DESIGN ASSOC.
124 WEST JEFFERSON
KIRKWOOD, MO 63122
PHONE (314) 909-1905
FAX (314) 909-1906

PROJECT:
ADDITION AND RENOVATIONS TO
McKnight Road
Church of Christ
2515 SOUTH MCKNIGHT ROAD
ST. LOUIS, MO 63124

THE SEAL AND SIGNATURES APPLY ONLY TO THE DOCUMENT TO WHICH THEY ARE ATTACHED, AND WE EXPRESSLY DISCLAIM ANY RESPONSIBILITY FOR ALL OTHER PLANS, SPECIFICATIONS, ESTIMATES, REPORTS, OR OTHER DOCUMENTS OR INSTRUMENTS RELATING TO OR INTENDED TO BE USED FOR ANY PART OR PARTS OF THE PROJECT.

COPYRIGHT 2002 FLETCHER ARCHITECTS, INC.

NO	DATE	REVISIONS
	00/00/01	ADDENDUM #0

PROJECT NO. 2001239
DRAWN BY: JW
CHECKED BY: SAH
DATE: NOVEMBER 1, 2002

SHEET NO. M4.1

CONSTRUCTION/BID DRAWINGS

Smith, Schuchat, & Cornett Engineering, Inc.
18207 Edison Avenue (636) 530-7777
Chesterfield, Missouri 63005 Fax# (636) 530-7877

THE SEAL AND SIGNATURE APPLY ONLY TO THE DOCUMENT TO WHICH THEY ARE ATTACHED, AND WE EXPRESSLY DISCLAIM ANY RESPONSIBILITY FOR ALL OTHER PLANS, SPECIFICATIONS, ESTIMATES, REPORTS, OR OTHER DOCUMENTS OR INSTRUMENTS RELATING TO OR INTENDED TO BE USED FOR ANY PART OR PARTS OF THE ARCHITECTURAL OR ENGINEERING PROJECT.

J:\2001\2001239\mech\012504M_1.dwg

PLUMBING DEMOLITION KEYED NOTES:

1. REMOVE EXISTING PLUMBING FIXTURES IN THIS ROOM. REMOVE EXISTING WASTE, VENT, HW AND CW LINES ABOVE THE FLOOR. CAP EXISTING WASTE LINES BELOW THE FLOOR FOR REUSE. CAP EXISTING VENT, CW AND HW LINES ABOVE CEILING FOR REUSE.
2. REMOVE EXISTING FLOOR DRAIN. CAP BELOW FLOOR.
3. DISCONNECT AND REMOVE EXISTING 2 COMPARTMENT SINK IN COMMUNITY ROOM. CAP WASTE AND WATER LINES.
4. REMOVE EXISTING DOWN SPOUTS AND ASSOCIATED STORM PIPING FROM EXISTING ROOF.
5. REMOVE EXISTING WALL HYDRANT. CAP WATER LINE. BELOW FLOOR OR ABOVE CEILING.

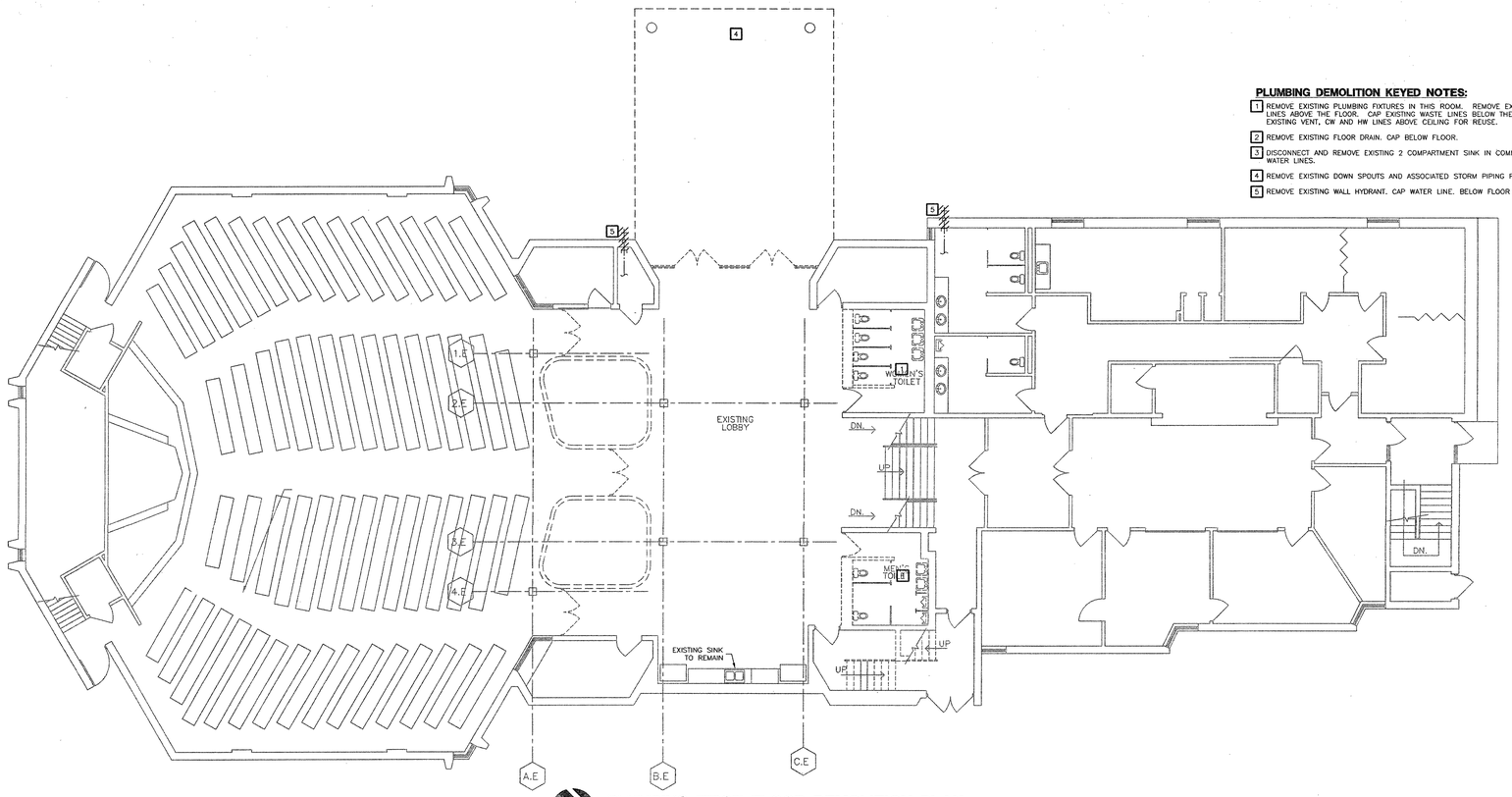

N **PLUMBING FIRST FLOOR DEMOLITION PLAN**

SCALE: 1/8" = 1' - 0"

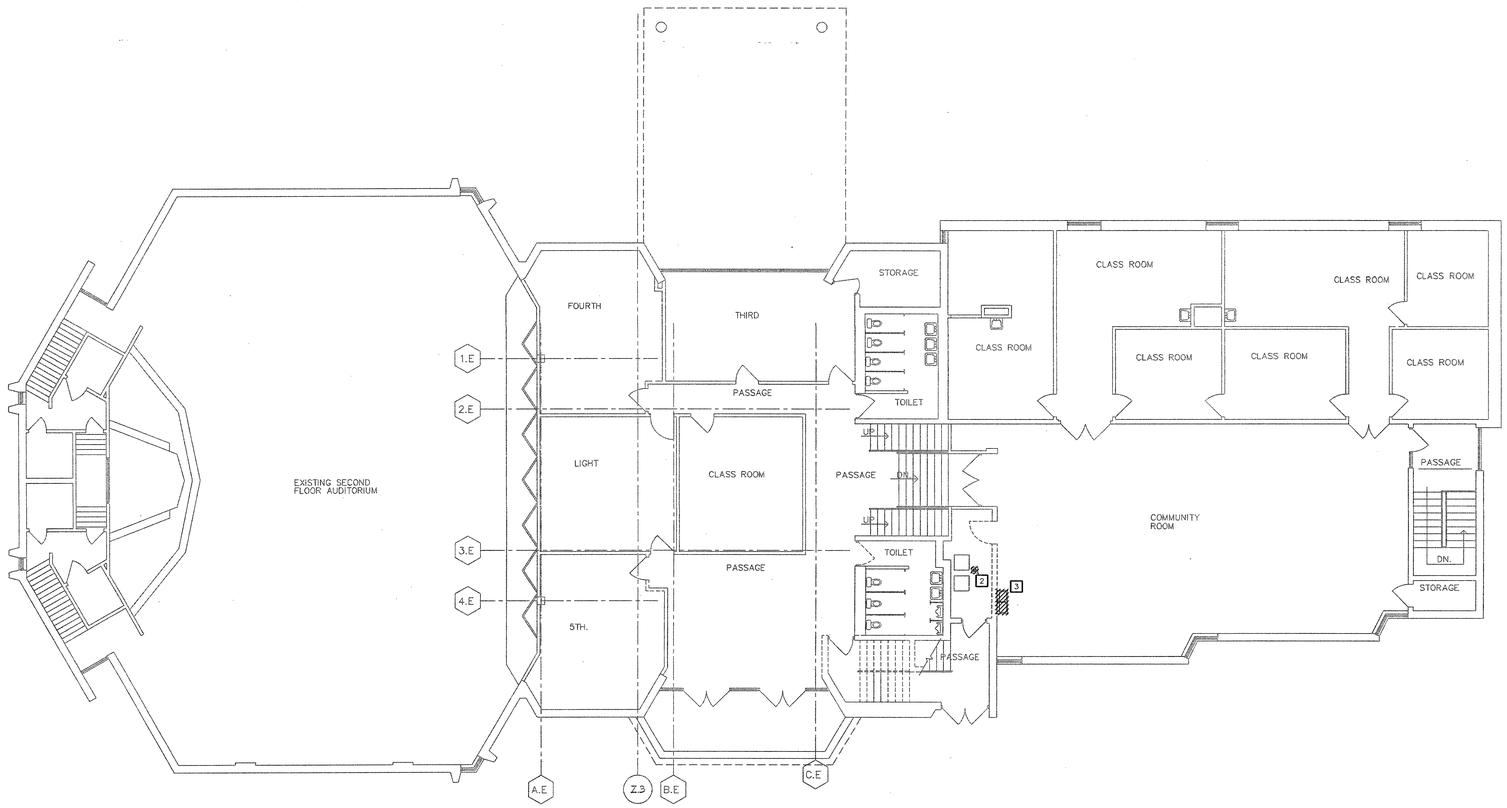

N **PLUMBING SECOND FLOOR DEMOLITION PLAN**

SCALE: 1/8" = 1' - 0"

THE SEAL AND SIGNATURE APPLY ONLY TO THE DOCUMENT TO WHICH THEY ARE AFFIXED, AND EXPRESSLY DISCLAIM ANY RESPONSIBILITY FOR ALL OTHER PLANS, SPECIFICATIONS, ESTIMATES, REPORTS, OR OTHER DOCUMENTS OR INSTRUMENTS RELATING TO OR INTENDED TO BE USED FOR ANY PART OR PARTS OF THE ARCHITECTURAL OR ENGINEERING PROJECT.

2001239\plan\1239PD1.1.dwg

Fletcher:: Architects, Inc.

ARCHITECTURE ▪ PLANNING ▪ INTERIORS
1906 NORTH SIGNAL HILLS DRIVE
KIRKWOOD, MO. 63122
TEL. (314) 965-6333
FAX. (314) 965-8997
info@fletcher-architects.com

CONSULTANTS

CIVIL ENGINEER:
FRONTENAC ENGR. GROUP, INC.
16 SUNNEN DR.
ST. LOUIS, MO 63143
PHONE (314) 644-2200
FAX (314) 644-0645

STRUCT. ENGINEER:
ABS CONSULTING
1844 LACKLAND HILLS PARKWAY
ST. LOUIS, MO 63146
PHONE (314) 994-7007
FAX (314) 994-0722

M.E.P. ENGINEER:
SSC ENGINEERING
550 SPIRIT OF ST. LOUIS BLVD.
CHESTERFIELD, MO 63005
PHONE (636) 530-7770
FAX (636) 530-7877

HARDWARE CONSULTANT
8750
5555 PIERRE CT.
ST. LOUIS, MO 63128
PHONE (314) 487-7776
FAX (314) 842-2242

KITCHEN CONSULTANTS
THE GEIGER GROUP
3501 WATSON ROAD
ST. LOUIS, MO 63139
PHONE (314) 645-2987
FAX (314) 645-3208

LANDSCAPE ARCHITECT
AUSTIN TAO. AND ASSOC.
2101 LOCUST, 2ND. FLOOR
ST. LOUIS, MO 63103
PHONE (314) 436-3999
FAX (314) 436-9130

INTERIOR DESIGN
OTOOLE DESIGN ASSOC.
124 WEST JEFFERSON
KIRKWOOD, MO 63122
PHONE (314) 909-1905
FAX (314) 909-1906

PROJECT:
ADDITION AND RENOVATIONS TO
McKnight Road
Church of Christ
2515 SOUTH MCKNIGHT ROAD
ST. LOUIS, MO 63124

THE SEAL AND SIGNATURES APPLY ONLY TO THE DOCUMENT TO WHICH THEY ARE AFFIXED, AND EXPRESSLY DISCLAIM ANY RESPONSIBILITY FOR ALL OTHER PLANS, SPECIFICATIONS, ESTIMATES, REPORTS, OR OTHER DOCUMENTS OR INSTRUMENTS RELATING TO OR INTENDED TO BE USED FOR ANY PART OR PARTS OF THE PROJECT.

COPYRIGHT 2002 FLETCHER ARCHITECTS, INC.

NO	DATE	REVISIONS
	00/00/01	ADDENDUM #0

PROJECT NO. 2001239
DRAWN BY: JW
CHECKED BY: SAH
DATE: NOVEMBER 1, 2002

SHEET NO. **PD1.1**

CONSTRUCTION/BID DRAWINGS

SSC Swim, Schuchat, & Cornett Engineering, Inc.
15207 Edison Avenue (636) 530-7770
Chesterfield, Missouri 63005 Fax# (636) 530-7877

PLUMBING KEYED NOTES:

1. CONNECT NEW WASTE AND VENT PIPING TO EXISTING WASTE AND VENT LINES IN THIS AREA. RE-ROUTE VENT LINES AROUND ELEV. AND ELEV. EQUIPMENT ROOM AS NECESSARY.
2. INSTALL SUMP PUMP IN ELEVATOR PIT. DISCHARGE TO HUB DRAIN IN STORAGE ROOM.
3. CONNECT NEW WASTE TO EXISTING WASTE LINE IN THIS AREA.
4. PROVIDE GREASE INTERCEPTOR FOR 3 COMPARTMENT SINK. SEE DETAIL SHEET P2.1. SEE KITCHEN EQUIPMENT DRAWINGS FOR 3 COMPARTMENT SINK INFORMATION.
5. PROVIDE DIRECT WASTE CONNECTION FOR DISPOSER. SEE KITCHEN EQUIPMENT DRAWINGS FOR DISPOSER INFORMATION.

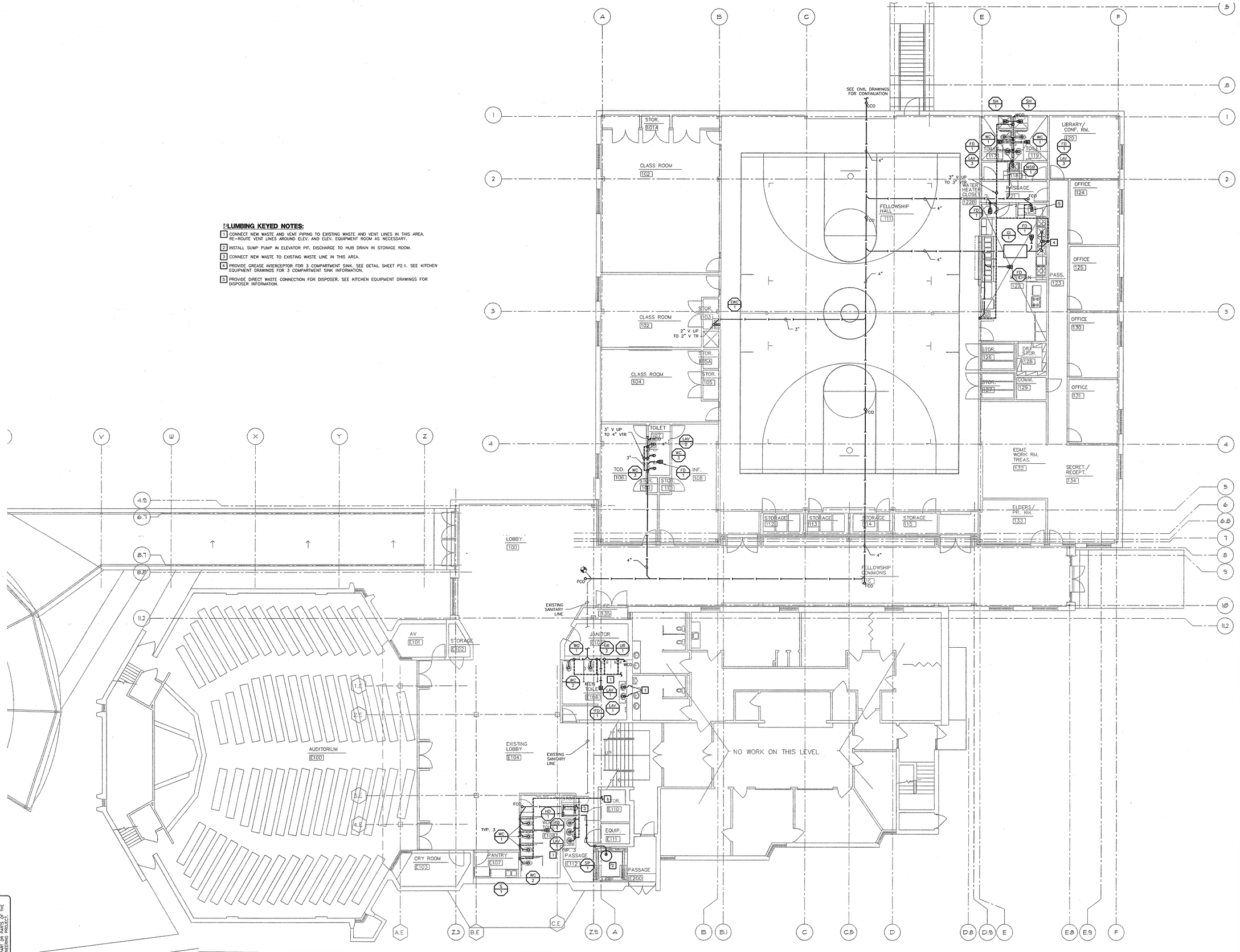

PLUMBING FIRST FLOOR PLAN - WASTE AND VENT

SCALE: 1/8" = 1' - 0"

THE SEAL AND SIGNATURES APPLY ONLY TO THE DOCUMENT TO WHICH THEY ARE AFFIXED, AND WE EXPRESSLY DISCLAIM ANY RESPONSIBILITY FOR ALL OTHER PLANS, SPECIFICATIONS, ESTIMATES, REPORTS, OR OTHER DOCUMENTS OR INSTRUMENTS RELATING TO OR INTENDED TO BE USED FOR ANY PART OR PARTS OF THE ARCHITECTURAL OR CONSTRUCTION PROJECT.

J:\2001\01plan\P2SP1_1.dwg

Fletcher:: Architects, Inc.

ARCHITECTURE ■ PLANNING ■ INTERIORS
1906 NORTH SIGNAL HILLS DRIVE
KIRKWOOD, MO. 63122
TEL. (314) 965-6333
FAX. (314) 965-8997
info@fletcher-architects.com

CONSULTANTS

CIVIL ENGINEER:
FRONTENAC ENGR. GROUP, INC.
16 SUNNEY DR.
ST. LOUIS, MO 63143
PHONE (314) 644-2200
FAX (314) 644-0645

STRUCT. ENGINEER:
ABS CONSULTING
1844 LACKLAND HILLS PARKWAY
ST. LOUIS, MO 63146
PHONE (314) 994-7007
FAX (314) 994-0722

M.E.P. ENGINEER:
SSC ENGINEERING
550 SPIRIT OF ST. LOUIS BLVD.
CHESTERFIELD, MO 63005
PHONE (636) 530-7770
FAX (636) 530-7877

HARDWARE CONSULTANT
8710
5555 PIERRE CT.
ST. LOUIS, MO 63128
PHONE (314) 487-7776
FAX (314) 842-2242

KITCHEN CONSULTANTS
THE GEIGER GROUP
3501 WATSON ROAD
ST. LOUIS, MO 63139
PHONE (314) 645-2987
FAX (314) 645-3208

LANDSCAPE ARCHITECT
AUSTIN TAO, AND ASSOC.
2101 LOCUST, 2ND. FLOOR
ST. LOUIS, MO 63103
PHONE (314) 436-3999
FAX (314) 436-9130

INTERIOR DESIGN
OTOOLE DESIGN ASSOC.
124 WEST JEFFERSON
KIRKWOOD, MO 63122
PHONE (314) 909-1905
FAX (314) 909-1906

PROJECT:
ADDITION AND RENOVATIONS TO
McKnight Road
Church of Christ
2515 SOUTH MCKNIGHT ROAD
ST. LOUIS, MO 63124

THE SEAL AND SIGNATURES APPLY ONLY TO THE DOCUMENT TO WHICH THEY ARE AFFIXED, AND WE EXPRESSLY DISCLAIM ANY RESPONSIBILITY FOR ALL OTHER PLANS, SPECIFICATIONS, ESTIMATES, REPORTS, OR OTHER DOCUMENTS OR INSTRUMENTS RELATING TO OR INTENDED TO BE USED FOR ANY PART OR PARTS OF THE PROJECT.

COPYRIGHT 2002 FLETCHER ARCHITECTS, INC.

NO	DATE	REVISIONS
	00/00/01	ADDENDUM #0

PROJECT NO. 2001239
DRAWN BY: JW
CHECKED BY: SAH
DATE: NOVEMBER 1, 2002

SHEET NO. **P1.1**

CONSTRUCTION/BID DRAWINGS

SSC Swim, Schuchat, & Cornett Engineering, Inc.
18207 Edison Avenue
Chesterfield, Missouri 63005
(636) 530-7770
Fax# (636) 530-7877

PLUMBING KEYED NOTES:

1. CONNECT HW & CW TO EXISTING HW AND CW IN THIS AREA. RELOCATE ANY EXISTING PIPING OVER NEW ELEVATOR EQUIPMENT ROOM TO AREA OVER STORAGE ROOM AND CORRIDOR.
2. ROUTE 3/4" HW AND 3/4" CW TO 3 COMPARTMENT SINK. COORDINATE WITH KITCHEN EQUIPMENT SUPPLIER.
3. ROUTE 1/2" HW AND 1/2" CW TO HANDSINK. COORDINATE WITH KITCHEN EQUIPMENT SUPPLIER.
4. ROUTE 3/4" HW TO UNDERCOUNTER DISHMACHINE. PROVIDE BACKFLOW DEVICE AS REQUIRED. COORDINATE WITH KITCHEN EQUIPMENT SUPPLIER.
5. ROUTE 1/2" CW AND 3/4" HW TO DISPOSAL/SINK. COORDINATE WITH KITCHEN EQUIPMENT SUPPLIER.
6. CONNECT TO EXISTING WATER LINE IN THIS AREA.
7. CONNECT NEW HW AND CW TO EXISTING HW AND CW LINES.

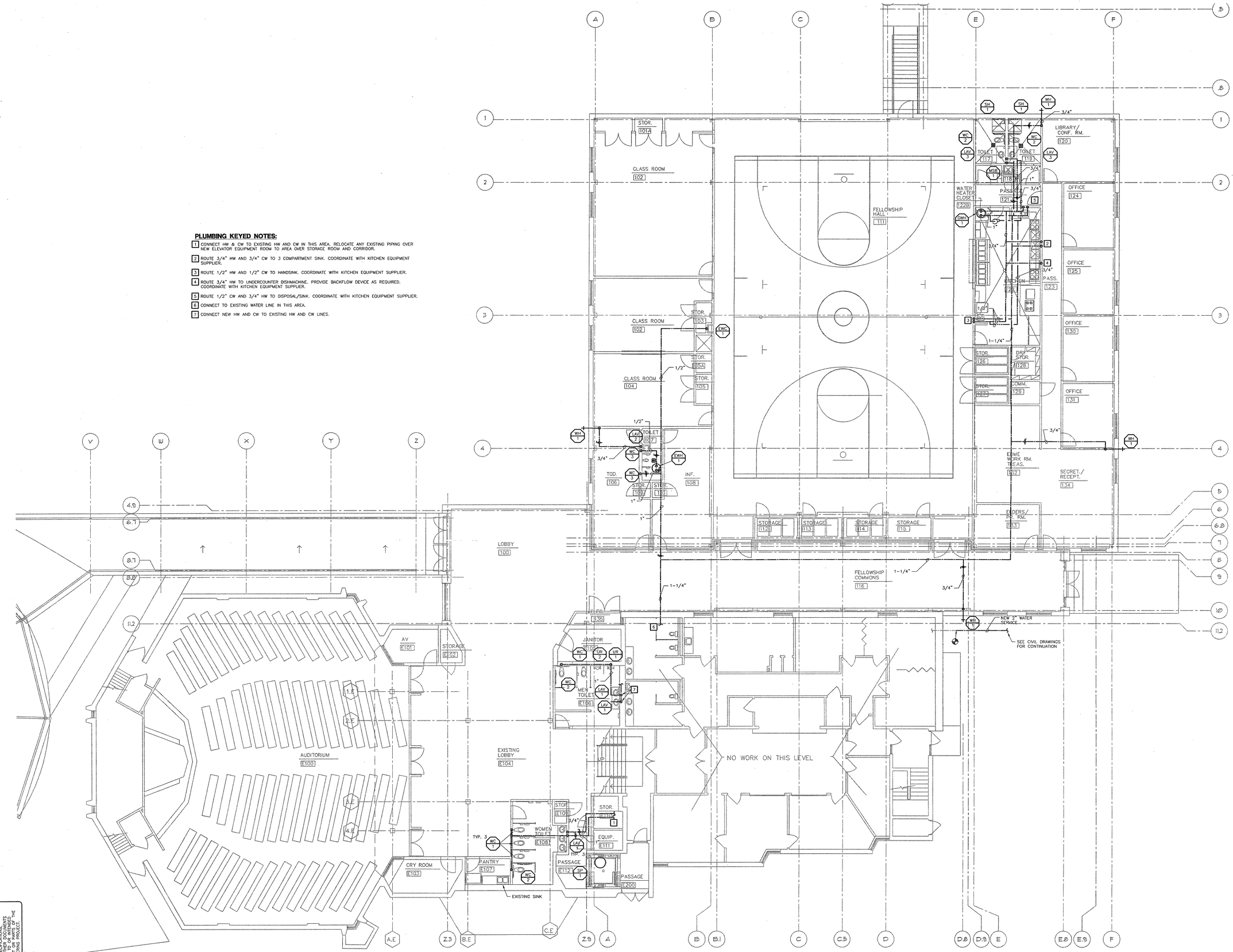

PLUMBING FIRST FLOOR PLAN - DOMESTIC WATER

SCALE: 1/8" = 1' - 0"

Fletcher:: Architects, Inc.

ARCHITECTURE ▪ PLANNING ▪ INTERIORS
1906 NORTH SIGNAL HILLS DRIVE
KIRKWOOD, MO. 63122
TEL. (314) 965-6333
FAX. (314) 965-8997
info@fletcher-architects.com

CONSULTANTS

CIVIL ENGINEER:
FRONTENAC ENGR. GROUP, INC.
16 SUNNEN DR.
ST. LOUIS, MO 63143
PHONE (314) 644-2200
FAX (314) 644-0645

STRUCT. ENGINEER:
ABS CONSULTING
1844 LACKLAND HILLS PARKWAY
ST. LOUIS, MO 63146
PHONE (314) 994-7007
FAX (314) 994-0722

M.E.P. ENGINEER:
SSC ENGINEERING
550 SPIRIT OF ST. LOUIS BLVD.
CHESTERFIELD, MO 63005
PHONE (636) 530-7770
FAX (636) 530-7877

HARDWARE CONSULTANT
ITO
5555 PIERRE CT.
ST. LOUIS, MO 63128
PHONE (314) 487-7776
FAX (314) 842-2242

KITCHEN CONSULTANTS
THE DEGER GROUP
3501 WATSON ROAD
ST. LOUIS, MO 63139
PHONE (314) 645-2987
FAX (314) 645-3208

LANDSCAPE ARCHITECT
AUSTIN TAO. AND ASSOC.
2101 LOCUST, 2ND. FLOOR
ST. LOUIS, MO 63103
PHONE (314) 436-3999
FAX (314) 436-9130

INTERIOR DESIGN
OTOOLE DESIGN ASSOC.
124 WEST JEFFERSON
KIRKWOOD, MO 63122
PHONE (314) 909-1905
FAX (314) 909-1906

PROJECT:
ADDITION AND RENOVATIONS TO
McKnight Road
Church of Christ
2515 SOUTH MCKNIGHT ROAD
ST. LOUIS, MO 63124

THE SEAL AND SIGNATURES APPLY ONLY TO THE DOCUMENT TO WHICH THEY ARE AFFIXED, AND WE EXPRESSLY DISCLAIM ANY RESPONSIBILITY FOR ALL OTHER SPECIFICATIONS, ESTIMATES, REPORTS OR OTHER DOCUMENTS OR OTHER INSTRUMENTS RELATING TO OR INTENDED TO BE USED FOR ANY PART OR PARTS OF THE ARCHITECTURAL OR ENGINEERING PROJECT.

COPYRIGHT 2002 FLETCHER ARCHITECTS, INC.

NO	DATE	REVISIONS
	02/02/01	ADDENDUM #0

PROJECT NO. 2001239
DRAWN BY: JW
CHECKED BY: SAH
DATE: NOVEMBER 1, 2002

SHEET NO. **P1.2**

CONSTRUCTION/BID DRAWINGS

SSC Swim, Schuchat, & Cornett Engineering, Inc.
18207 Edison Avenue, Chesterfield, Missouri 63005 (636) 530-7770 Fax# (636) 530-7877

THE SEAL AND SIGNATURE APPLY ONLY TO THE DOCUMENT TO WHICH THEY ARE AFFIXED, AND WE EXPRESSLY DISCLAIM ANY RESPONSIBILITY FOR ALL OTHER SPECIFICATIONS, ESTIMATES, REPORTS OR OTHER DOCUMENTS OR OTHER INSTRUMENTS RELATING TO OR INTENDED TO BE USED FOR ANY PART OR PARTS OF THE ARCHITECTURAL OR ENGINEERING PROJECT.

J:\2001\Dgn\pln1ST.dwg

PLUMBING SYMBOLS LEGEND

⊕	CONNECTION OF NEW TO EXISTING
— D —	CONDENSATE DRAIN
— C —	COLD WATER
— H —	HOT WATER SUPPLY
— HR —	HOT WATER RETURN
— S —	SOFT WATER
— H —	HARD WATER
— T —	TEMPERED WATER
— 140 —	140 DEGREE HOT WATER
— 140R —	RECIRCULATED 140 DEGREE WATER
— TR —	RECIRCULATED TEMPERED WATER
— G —	GAS PIPING
— LPG —	LIQUID PROPANE GAS
— —	SANITARY WASTE ABOVE GRADE
— —	SANITARY WASTE BELOW GRADE
— — — —	SANITARY VENT
VTR	VENT THROUGH ROOF
— ST —	STORM DRAINAGE PIPING ABOVE GRADE
— ST —	STORM DRAINAGE PIPING BELOW GRADE
— OD —	OVERFLOW DRAINAGE PIPING ABOVE GRADE
— OD —	OVERFLOW DRAINAGE PIPING BELOW GRADE
— O —	OIL PIPING–DOUBLE WALLED
— WO —	WASTE OIL PIPING–DOUBLE WALLED
	PLUMBING TRAP
	PIPE TURNING DOWN
	PIPE TURNING UP
	SHOCK ARRESTOR
	BALL VALVE
	FLOW CONTROL/BALANCE VALVE
	GATE VALVE
	PRESSURE RELIEF VALVE
	CHECK VALVE
	GAS COCK
	UNION
	PRESSURE GAUGE
	STRAINER
T	TEMPERATURE SENSOR
OWS	OIL/WATER SEPERATOR
UST	UNDERGROUND STORAGE TANK
AFF	ABOVE FINISHED FLOOR
SS	SOIL STACK
NTS	NOT TO SCALE
CI	CAST IRON
CO	CLEAN OUT
><	THRU–FLOOR
RPBFP	REDUCED PRESSURE BACKFLOW PREVENTOR
	FIXTURE TYPE FIXTURE NUMBER

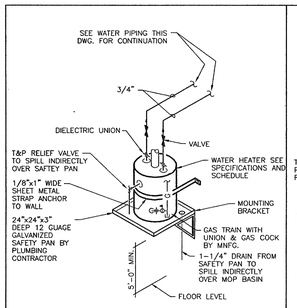

SHELF MOUNTED WATER HEATER
NO SCALE

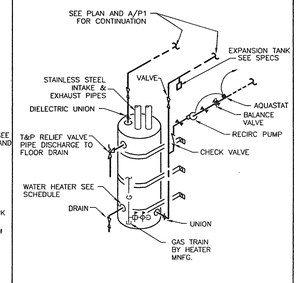

WATER HEATER DETAIL
NO SCALE

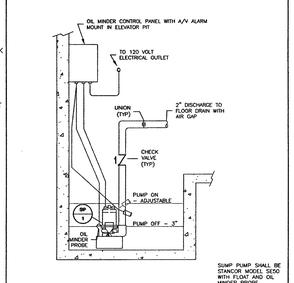

ELEVATOR SUMP PUMP DETAIL
NO SCALE

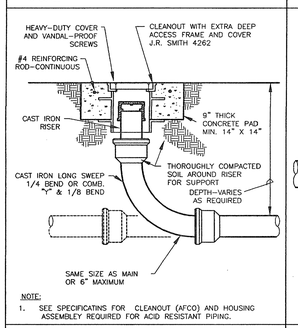

NOTE:
1. SEE SPECIFICATAINS FOR CLEANOUT (AFCO) AND HOUSING ASSEMBLEY REQUIRED FOR ACID RESISTANT PIPING.

GRADE CLEANOUT DETAIL
NO SCALE

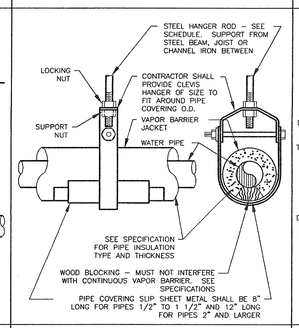

PIPE COVERING PROTECTOR DETAIL
NO SCALE

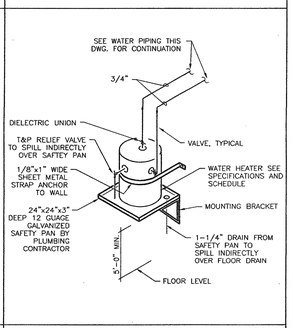

SHELF MOUNTED WATER HEATER
NO SCALE

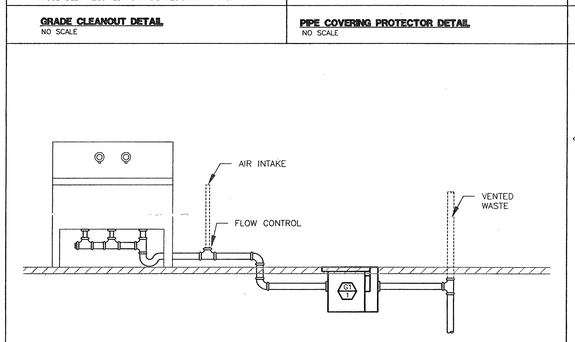

GREASE INTERCEPTOR DETAIL
NO SCALE

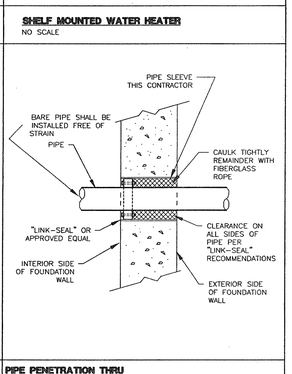

PIPE PENETRATION THRU FOUNDATION WALL (UNDERGROUND)
NO SCALE

ELECTRIC WATER HEATER SCHEDULE

MARK	MNFG.	MODEL NO.	STORAGE GAL	RECOVERY	°F. RISE	HEAT SOURCE	HEAT CAP.	REMARKS
EWH–1	A.O. SMITH	DEL–15	15	8 GPH	100	120/1/60	2000 WATTS	1

1. SHELF MOUNTED ABOVE MOP SERVICE BASIN.

GAS WATER HEATER SCHEDULE

MARK	MNFG.	MODEL NO.	STORAGE GAL	RECOVERY	°F. RISE	HEAT SOURCE	HEAT CAP.	REMARKS
GWH–1	A.O. SMITH	BTH–120	60	142 GPH	100	NATURAL GAS	125,000 BTU	1

1. PROVIDE STAINLESS STEEL TYPE 304 EXHAUST AND VENT PIPES. ROUTE UP THROUGH ROOF.

HOT WATER RECIRC. PUMP SCHEDULE

MARK	MANUFACTURER	MODEL NO.	GPM	FT HEAD	HP	V/P	FLANGE	REMARKS
RP–1	BELL & GOSSETT	LR–20BF	6	10'	1/20	120/1	3/4	1

1. ALL BRONZE.

ELEVATOR SUMP PUMP SCHEDULE

MARK	MODEL SE–50	MODEL	GPM	FT. HD.	HP	ELECT. V/PH/C	REMARKS
SP–1	STANCOR	SE–50	65	10'	1/2	120/1/60	1

1. WITH 10' ELECTRICAL CORD, FLOAT SWITCH, OIL MINDER PROBE , AND ALARM PANEL WITH AUDIBLE/VISUAL ALARM

GREASE INTERCEPTOR

MARK	MANUFACTURER	MODEL NO.	GPM	LBS	INLET	OUTLET	CO PLUG	REMARKS
GI–1	J.R. SMITH	8150	50	100	3"	3"	2"	1,2,3

1. FURNISH AND INSTALL WITH FLOW CONTROL DEVICE.
2. RECESSED IN FLOOR.
3. INSTALL PER DETAIL, THIS SHEET.

PLUMBING FIXTURE SCHEDULE

MARK	FIXTURE	SAN.	VENT	C.W.	H.W.	REMARKS
WC–1	WATER CLOSET	4"	2"	1"	–	HEIGHT 15"
WC–2	WATER CLOSET	4"	2"	1"	–	HEIGHT 17"
WC–3	WATER CLOSET	4"	2"	1"	–	CHILD HEIGHT
UR–1	URINAL	2"	1–1/2"	3/4"	–	HEIGHT 24"
UR–2	URINAL	2"	1–1/2"	3/4"	–	HEIGHT 17"
LAV–1	LAVATORY (COUNTERTOP)	1–1/2"	1–1/2"	1/2"	1/2"	ADA
LAV–2	LAVATORY	1–1/2"	1–1/2"	1/2"	1/2"	ADA
LAV–3	LAVATORY (COUNTERTOP)	1–1/2"	1–1/2"	1/2"	1/2"	ADA
MSB–1	MOP SERVICE BASIN	3"	1–1/2"	1/2"	1/2"	–
SH–1	SHOWER	2"	1–1/2"	1/2"	1/2"	ADA
EWC–1	ELECTRIC WATER COOLER	1–1/2"	1–1/2"	1/2"	–	ADA
FD–1	FLOOR DRAIN	3"	2"	–	–	–
HD–1	HUB DRAIN	3"	2"	–	–	–
WH–1	WALL HYDRANT	–	–	3/4"	–	NON–FREEZE HEIGHT 36"

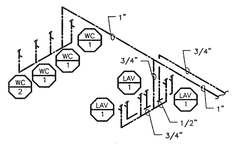

WATER ISOMETRIC – TOILET E108
NO SCALE

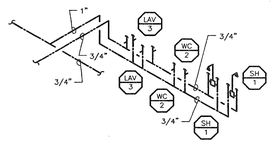

WATER ISOMETRIC – TOILET RMS 117,119
NO SCALE

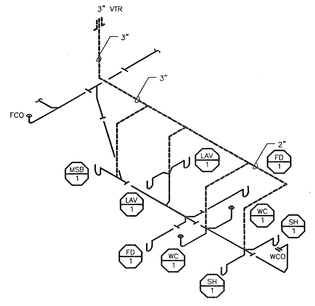

WASTE ISOMETRIC – TOILET RMS 117,119
NO SCALE

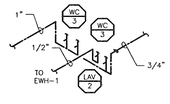

WATER ISOMETRIC – TOILET 107
NO SCALE

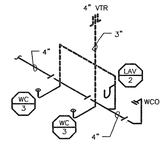

WASTE ISOMETRIC – TOILET 107
NO SCALE

Fletcher:: Architects, Inc.
ARCHITECTURE ■ PLANNING ■ INTERIORS
1906 NORTH SIGNAL HILLS DRIVE
KIRKWOOD, MO. 63122
TEL. (314) 965-6333
FAX. (314) 965-8997
info@fletcher-architects.com

CONSULTANTS

CIVIL ENGINEER:
FRONTENAC ENGR. GROUP, INC.
16 SUNNEN DR.
ST. LOUIS, MO 63143
PHONE (314) 644–2200
FAX (314) 644–0645

STRUCT. ENGINEER:
ABS CONSULTING
1844 LACKLAND HILLS PARKWAY
ST. LOUIS, MO 63146
PHONE (314) 994–7007
FAX (314) 994–0722

M.E.P. ENGINEER:
SSC ENGINEERING
550 SPIRIT OF ST. LOUIS BLVD.
CHESTERFIELD, MO 63005
PHONE (636) 530–7770
FAX (636) 530–7877

HARDWARE CONSULTANT
8710
5555 PIERRE CT.
ST. LOUIS, MO 63128
PHONE (314) 487–7776
FAX (314) 842–2242

KITCHEN CONSULTANTS
THE GEIGER GROUP
3501 WATSON ROAD
ST. LOUIS, MO 63139
PHONE (314) 645–2987
FAX (314) 645–3208

LANDSCAPE ARCHITECT
AUSTIN TAO. AND ASSOC.
2101 LOCUST, 2ND. FLOOR
ST. LOUIS, MO 63103
PHONE (314) 436–3999
FAX (314) 436–9130

INTERIOR DESIGN
OTOOLE DESIGN ASSOC.
124 WEST JEFFERSON
KIRKWOOD, MO 63122
PHONE (314) 909–1905
FAX (314) 909–1906

PROJECT:
ADDITION AND RENOVATIONS TO
McKnight Road
Church of Christ
2515 SOUTH MCKNIGHT ROAD
ST. LOUIS, MO 63124

THE SEAL AND SIGNATURE APPLY ONLY TO THE DOCUMENTS TO WHICH THEY ARE AFFIXED, AND EXPRESSLY DISCLAIM ANY RESPONSIBILITY FOR ALL OTHER PLANS, SPECIFICATIONS, ESTIMATES, REPORTS, OR OTHER DOCUMENTS OR INSTRUMENTS RELATING TO OR INTENDED TO BE USED FOR ANY PART OR PARTS OF THE ARCHITECTURAL OR ENGINEERING PROJECT.

COPYRIGHT 2002 FLETCHER ARCHITECTS, INC.

NO	DATE	REVISIONS
	00/00/01	ADDENDUM #0

PROJECT NO. 2001239
DRAWN BY: JW
CHECKED BY: SAH
DATE: NOVEMBER 1, 2002

SHEET NO. **P2.1**

CONSTRUCTION/BID DRAWINGS

SSC Swim, Schuchat, & Cornett Engineering, Inc.
15207 Edison Avenue Chesterfield, Missouri 63005 (636) 530-7770 Fax# (636) 530-7877

THE SEAL AND SIGNATURE APPLY ONLY TO THE DOCUMENTS TO WHICH THEY ARE AFFIXED, AND EXPRESSLY DISCLAIM ANY RESPONSIBILITY FOR ALL OTHER PLANS, SPECIFICATIONS, ESTIMATES, REPORTS, OR OTHER DOCUMENTS OR INSTRUMENTS RELATING TO OR INTENDED TO BE USED FOR ANY PART OR PARTS OF THE ARCHITECTURAL OR ENGINEERING PROJECT.

J:\2001239\plan\1239P2_1.dwg

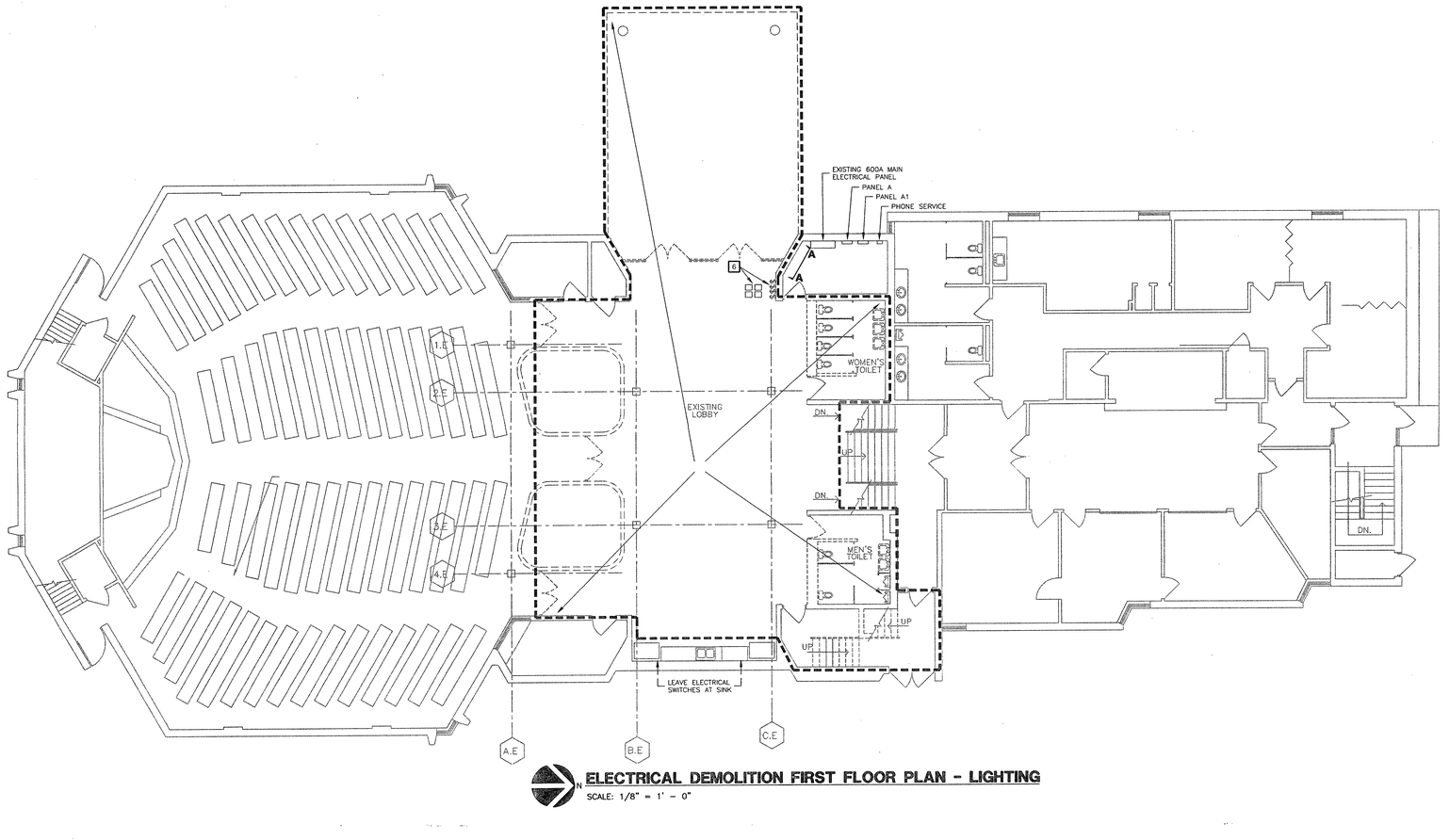

ELECTRICAL DEMOLITION FIRST FLOOR PLAN - LIGHTING

SCALE: 1/8" = 1' - 0"

GENERAL DEMOLITION NOTES

1. THE OWNER INTENDS TO VACATE AREA OF WORK BEFORE DEMOLITION BEGINS. UTILITIES AND SERVICES TO ANY OTHER EXISTING FACILITIES SHALL NOT BE INTERRUPTED WITHOUT THE OWNERS APPROVAL AS TO THE TIME AND DURATION. THE OWNER WILL CONTINUE TO OCCUPY THE REST OF THE EXISTING FACILITIES THROUGHOUT THE CONSTRUCTION OPERATIONS AND THE ELECTRICAL CONTRACTOR SHALL SO ORGANIZE HIS WORK AS TO CAUSE A MINIMUM OF INTERRUPTIONS SHALL BE SCHEDULED AT THE CONVENIENCE OF THE OWNER.
2. ALL LIGHT FIXTURES, 120 VOLT RECEPTACLES, SPECIAL RECEPTACLES, SWITCHES, ETC. ALONG WITH ALL CONDUIT AND WIRE SHALL BE REMOVED BY THE ELECTRICAL CONTRACTOR. IT SHALL BE THE RESPONSIBILITY OF THE ELECTRICAL CONTRACTOR TO VISIBLY EXAMINE ALL EXISTING WALLS AND CEILINGS DESIGNATED FOR REMOVAL TO DETERMINE THE CONDUIT AND WIRING THAT WILL REQUIRE REMOVAL.
3. THE ELECTRICAL CONTRACTOR SHALL REMOVE EQUIPMENT, OUTLETS, CONDUIT, WIRE, ETC., AS SHOWN AND SPECIFIED ON DRAWINGS AND AS MAY BECOME NECESSARY BECAUSE OF EXISTING FIELD CONDITIONS. IT SHALL BE THE RESPONSIBILITY OF THE ELECTRICAL CONTRACTOR TO VISIBLY EXAMINE ALL EXISTING WALLS AND CEILINGS DESIGNATED FOR REMOVAL TO DETERMINE THE CONDUIT AND THE WIRING THAT WILL REQUIRE REMOVAL.
4. ALL LIGHTING FIXTURES, SWITCHES RECEPTACLES, SPECIAL OUTLETS, ETC., WHICH ARE SHOWN WITH DASHED LINE SYMBOLS ON THE DEMOLITION PLANS OR SO NOTED SHALL BE REMOVED BY THE ELECTRICAL CONTRACTOR ALONG WITH ALL ASSOCIATED WIRING AND CONDUIT, UNLESS OTHERWISE NOTED. ALL DEVICES SHOWN WITH SOLID LINES SHALL REMAIN.
5. MAINTAIN CIRCUIT CONTINUITY TO ALL EXISTING FIXTURES, EQUIPMENT, OUTLETS, ETC. TO REMAIN IN USE WHETHER NOTED ON THE PLANS OR NOT. FIELD VERIFY EXISTING ITEMS TO REMAIN IN USE.
6. WIRING FOR EXISTING CIRCUITS WHICH ARE PARTIALLY ABANDONED SHALL BE RECONNECTED BY THE ELECTRICAL CONTRACTOR TO SERVICE THE REMAINING OUTLETS ON THE CIRCUIT.
7. ALL WIRING FOR A CIRCUIT WHICH IS TO BE REMOVED SHALL BE REMOVED BY THE ELECTRICAL CONTRACTOR BACK TO THE PANEL WHICH SUPPLIED THE CIRCUIT.
8. ALL EMPTY CONDUIT (MADE EMPTY BY THIS DEMOLITION) SHALL BE REMOVED BY THE ELECTRICAL CONTRACTOR.
9. ALL UNUSED TELEPHONE AND DATA CABLES SHALL BE REMOVED BY THE ELECTRICAL CONTRACTOR ALL OTHER UNUSED CABLES SHALL ALSO BE REMOVED BY THE ELECTRICAL CONTRACTOR.
10. ALL ACTIVE CIRCUITING THAT RUNS THROUGH THIS SPACE, ORIGINATING AND/OR TERMINATING IN OTHER SPACES, SHALL REMAIN IN PLACE.
11. WHERE FIXTURES EQUIPMENT OR DEVICES ARE REMOVED, PATCH AND FINISH THE SURFACE AS REQUIRED, TO MATCH THE EXISTING.
12. MISCELLANEOUS CABLES, CONDUITS, WIRING DEVICES, ETC., TO BE REMOVED SHALL BECOME THE PROPERTY OF THE CONTRACTOR AND HE SHALL REMOVE THESE ITEMS FROM THE PREMISES.
13. ALL EXISTING ELECTRICAL EQUIPMENT, ETC., TO BE REMOVED SHALL REMAIN THE PROPERTY OF THE CONTRACTOR, UNLESS OTHERWISE NOTED. THE CONTRACTOR SHALL REMOVE THESE ITEMS FROM THE PREMISES.
14. FOR ALL EXISTING ELECTRICAL DEVICES IN WALLS TO BE REMOVED, ELECTRICAL CONTRACTOR SHALL DISCONNECT POWER, REMOVE CONDUCTORS AND CAP CONDUIT IN FLOOR OR CEILING AS REQUIRED. DEVICES ARE TO BE REMOVED ALONG WITH WALL BY GENERAL CONTRACTOR.
15. FOR ALL EXISTING ELECTRICAL DEVICES TO BE REMOVED FROM WALLS WHICH REMAIN, ELECTRICAL CONTRACTOR SHALL DISCONNECT POWER, REMOVE CONDUCTORS, REMOVE DEVICE AND PROVIDE BLANK COVER PLATE OR AS NOTED.
16. EXISTING RECEPTACLES WHICH ARE TO REMAIN SHALL BE EXTENDED TO BE FLUSH WITH NEW FINISH ON EXISTING WALL WHERE REQUIRED.
17. WHERE CONDUITS EXTENDING OUT OF THE FLOOR ARE TO BE REMOVED, CUT THE CONDUIT OFF 1/2" BELOW THE FLOOR LINE AND PATCH.
18. FIELD VERIFY DEMOLITION AREAS INDICATED ON THE DRAWINGS AND DISCONNECT AND REMOVE ELECTRICAL ITEMS IN THESE AREAS AS REQUIRED.
19. WHERE ELECTRICAL EQUIPMENT HAS BEEN DEMO'ED PATCH WALL AND MAKE READY FOR NEW WALL FINISH.
20. ALL DEMOLITION ELECTRICAL ITEMS SHALL BE TURNED OVER TO OWNER OR IF NOT WANTED FOR REUSE, ITEMS SHALL BE DISPOSED OF BY THE ELECTRICAL CONTRACTOR.

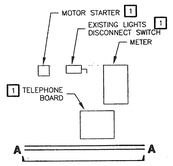

ELECTRICAL ROOM SECTION

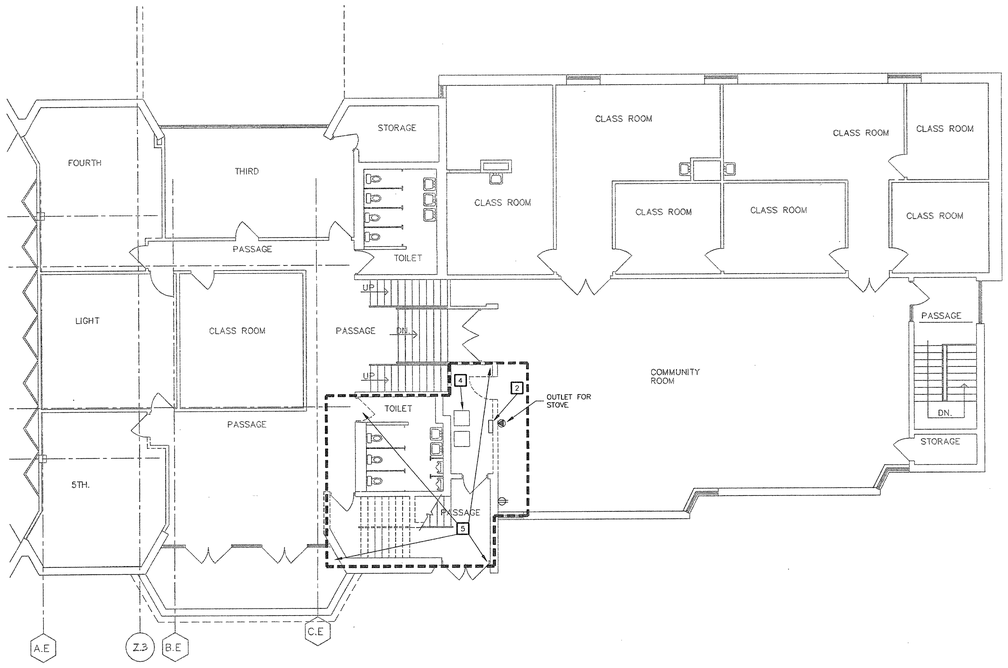

ELECTRICAL DEMOLITION SECOND FLOOR PLAN - LIGHTING

SCALE: 1/8" = 1' - 0"

ELECTRICAL DEMOLITION KEYED NOTES:

1. EXISTING DEVICE TO BE RELOCATED TO NEW WALL ERECTED IN PLACE OF THE EXISTING DOOR.
2. EXISTING METER TO BE DISCONNECTED AND REMOVED AFTER NEW SERVICE IS INSTALLED.
3. EXISTING PANEL TO BE RELOCATED. SEE REMODEL PLAN AND ONE-LINE DIAGRAM.
4. EXISTING FURNACE TO BE DISCONNECTED FOR REMOVAL BY OTHERS.
5. GENERAL AREA OF DEMOLITION. REMOVE ALL ELECTRICAL DEVICES UNLESS SHOWN OR NOTED OTHERWISE.
6. EXISTING LIGHTING SWITCHES TO BE REMOVED. THE EXISTING PARKING LOT LIGHTING CONTROLS SHALL BE RELOCATED INTO NEW ELECTRICAL ROOM.

THE SEAL AND SIGNATURE APPLY ONLY TO THE DOCUMENT TO WHICH THEY ARE AFFIXED AND EXPRESSLY DISCLAIM ANY RESPONSIBILITY FOR ALL OTHER PLANS, SPECIFICATIONS, ESTIMATES, REPORTS, OR INSTRUMENTS RELATING TO OR INTENDED TO BE USED FOR ANY PART OR PARTS OF THE ARCHITECTURAL OR ENGINEERING PROJECT.

J:\2001\2001239\elec\1108ED1.1.dwg

SSC Swim, Schuchat, & Cornett Engineering, Inc.
16207 Edison Avenue (636) 530-7770
Chesterfield, Missouri 63005 Fax# (636) 530-7677

Fletcher:: Architects, Inc.
ARCHITECTURE ■ PLANNING ■ INTERIORS
1906 NORTH SIGNAL HILLS DRIVE
KIRKWOOD, MO. 63122
TEL. (314) 965-6333
FAX. (314) 965-8997
info@fletcher-architects.com

CONSULTANTS
CIVIL ENGINEER:
FRONTENAC ENGR. GROUP, INC.
16 SUNNEN DR.
ST. LOUIS, MO 63143
PHONE (314) 644-2200
FAX (314) 644-0645
STRUCT. ENGINEER:
ABS CONSULTING
1844 LACKLAND HILLS PARKWAY
ST. LOUIS, MO 63146
PHONE (314) 994-7007
FAX (314) 994-0722
M.E.P. ENGINEER:
SSC ENGINEERING
550 SPIRIT OF ST. LOUIS BLVD.
CHESTERFIELD, MO 63005
PHONE (636) 530-7770
FAX (636) 530-7877
HARDWARE CONSULTANT
8710
5535 PIERRE CT.
ST. LOUIS, MO 63128
PHONE (314) 487-7776
FAX (314) 842-2242
KITCHEN CONSULTANTS
THE GEIGER GROUP
3501 WATSON ROAD
ST. LOUIS, MO 63139
PHONE (314) 645-2987
FAX (314) 645-3208
LANDSCAPE ARCHITECT
AUSTIN TAO AND ASSOC.
2101 LOCUST, 2ND. FLOOR
ST. LOUIS, MO 63103
PHONE (314) 436-3999
FAX (314) 436-9130
INTERIOR DESIGN
DYDOLE DESIGN ASSOC.
124 WEST JEFFERSON
KIRKWOOD, MO 63122
PHONE (314) 909-1905
FAX (314) 909-1906

PROJECT:
ADDITION AND RENOVATIONS TO
McKnight Road Church of Christ
2515 SOUTH MCKNIGHT ROAD
ST. LOUIS, MO 63124

THE SEAL AND SIGNATURES APPLY ONLY TO THE DOCUMENT TO WHICH THEY ARE AFFIXED, AND WE EXPRESSLY DISCLAIM ANY RESPONSIBILITY FOR ALL OTHER PLANS, SPECIFICATIONS, ESTIMATES, REPORTS, OR OTHER DOCUMENTS OR INSTRUMENTS RELATING TO OR INTENDED TO BE USED FOR ANY PART OR PARTS OF THE PROJECT.

COPYRIGHT 2002 FLETCHER ARCHITECTS, INC.

NO	DATE	REVISIONS
	00/00/01	ADDENDUM #0

PROJECT NO. 2001239
DRAWN BY: JW
CHECKED BY: CF
DATE: NOVEMBER 1, 2002

SHEET NO. ED1.1

CONSTRUCTION/BID DRAWINGS

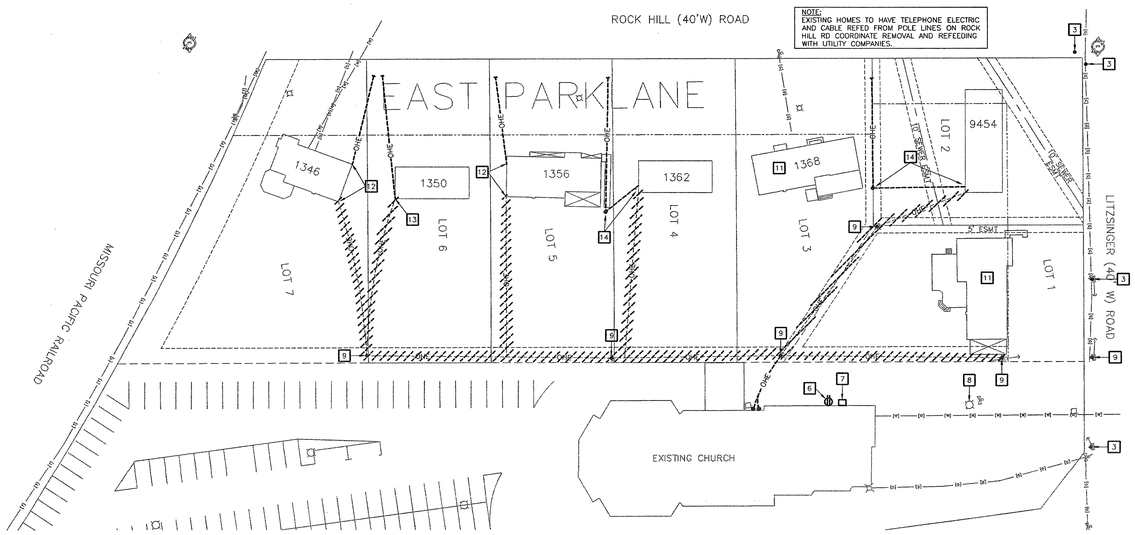

EXISTING SITE DEMOLITION PLAN

1" = 40'-0"

ELECTRICAL KEYED NOTES:

1. NEW PAD MOUNTED TRANSFORMER BY AMEREN U.E. PAD IS PROVIDED BY UTILITY COMPANY AND PLACED BY E.C. PER UTILITY COMPANY REQUIREMENTS.
2. 4" PVC CONDUIT BY E.C. FOR PRIMARY CABLE. INSTALL PER UTILITY COMPANY REQUIREMENTS.
3. EXISTING UTILITY POLE TO REMAIN.
4. COORDINATE WITH UTILITY COMPANY FOR PRIMARY CONDUIT INSTALLATION AT POLE. COORDINATE THE EXACT POLE LOCATION WITH UTILITY.
5. SECONDARY CONDUIT TO MAIN DISTRIBUTION PANEL. SEE ONE LINE DIAGRAM.
6. EXISTING EXTERIOR RECEPTACLE TO BE REMOVED.
7. EXISTING CONDUIT AND ELBOW. VERIFY THIS IS TO THE EXISTING PARKING LOT LIGHT AND REMOVE.
8. EXISTING PARKING LOT LIGHT TO BE REMOVED BY E.C.
9. EXISTING UTILITY POLE TO BE REMOVED BY U.E. COORDINATE REMOVAL WITH UTILITY COMPANY.
10. NEW UTILITY RISER POLE.
11. EXISTING HOME TO BE DEMOLISHED.
12. EC SHALL RELOCATE EXISTING SERVICE WEATHERHEAD CONNECTION FOR CHURCH OWNED PROPERTY TO ALLOW NEW SERVICE DROP FROM WEST OF PROPERTY.
13. EXISTING PROPERTY TO BE REFERRED BY AMEREN TO EXISTING SERVICE WEATHERHEAD.
14. NEW POLE LINE EASEMENT ON CHURCH PROPERTY WILL ALLOW U.E. TO REFEED EXISTING PROPERTY AT THE EXISTING WEATHERHEAD.

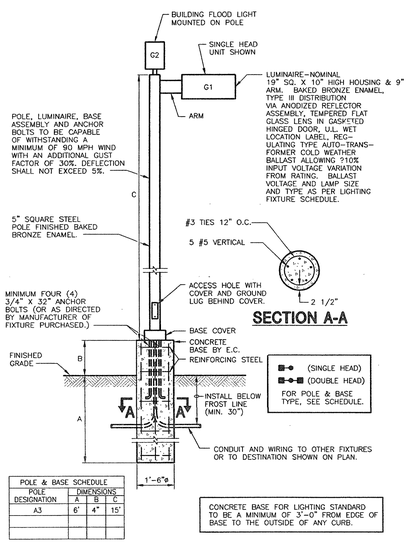

SECTION A-A

POLE & BASE SCHEDULE			
POLE DESIGNATION	DIMENSIONS A	B	C
A3	6'	4"	15'

LIGHT STANDARD DETAIL

NO SCALE

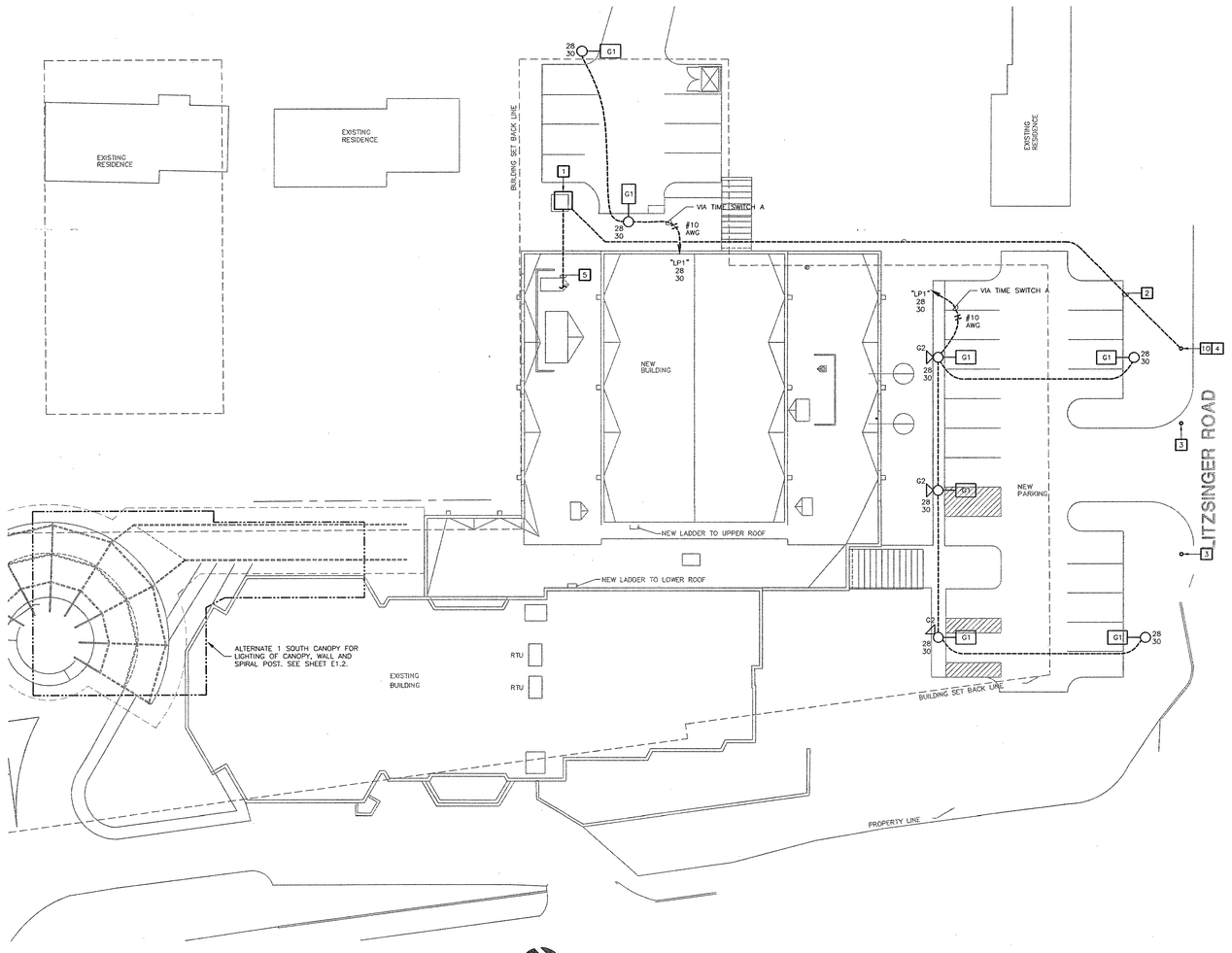

ELECTRICAL SITE PLAN

1" = 20'-0"

THE SEAL AND SIGNATURE APPLY ONLY TO THE DOCUMENT TO WHICH THEY ARE AFFIXED, AND FLETCHER ARCHITECTS, INC. DISCLAIMS ANY RESPONSIBILITY FOR ALL OTHER PLANS, SPECIFICATIONS, ESTIMATES, REPORTS, OR OTHER DOCUMENTS OR INSTRUMENTS RELATING TO OR INTENDED TO BE USED FOR ANY PART OR PARTS OF THE PROJECT.

Fletcher:: Architects, Inc.

ARCHITECTURE ■ PLANNING ■ INTERIORS
1906 NORTH SIGNAL HILLS DRIVE
KIRKWOOD, MO. 63122
TEL. (314) 965-4333
FAX. (314) 965-8997
info@fletcher-architects.com

CONSULTANTS

CIVIL ENGINEER:
FRONTENAC ENGR. GROUP, INC.
16 SUNNEN DR.
ST. LOUIS, MO 63143
PHONE (314) 644-2200
FAX (314) 644-0645

STRUCT. ENGINEER:
ABS CONSULTING
1844 LACKLAND HILLS PARKWAY
ST. LOUIS, MO 63146
PHONE (314) 994-7007
FAX (314) 994-0722

M.E.P. ENGINEER:
SSC ENGINEERING
550 SPIRIT OF ST. LOUIS BLVD.
CHESTERFIELD, MO 63005
PHONE (636) 530-7770
FAX (636) 530-7877

HARDWARE CONSULTANT
8710
5555 PIERRE CT.
ST. LOUIS, MO 63128
PHONE (314) 487-7776
FAX (314) 842-2242

KITCHEN CONSULTANTS
THE GEIGER GROUP
3501 WATSON ROAD
ST. LOUIS, MO 63139
PHONE (314) 645-2987
FAX (314) 645-3208

LANDSCAPE ARCHITECT
AUSTIN TAO AND ASSOC.
2101 LOCUST, 2ND. FLOOR
ST. LOUIS, MO 63103
PHONE (314) 436-3999
FAX (314) 436-9130

INTERIOR DESIGN
O'TOOLE DESIGN ASSOC.
124 WEST JEFFERSON
KIRKWOOD, MO 63122
PHONE (314) 909-1905
FAX (314) 909-1906

PROJECT:
ADDITION AND RENOVATIONS TO
McKnight Road
Church of Christ
2515 SOUTH MCKNIGHT ROAD
ST. LOUIS, MO 63124

THE SEAL AND SIGNATURES APPLY ONLY TO THE DOCUMENT TO WHICH THEY ARE AFFIXED, AND FLETCHER ARCHITECTS, INC. DISCLAIMS ANY RESPONSIBILITY FOR ALL OTHER PLANS, SPECIFICATIONS, ESTIMATES, REPORTS, OR OTHER DOCUMENTS OR INSTRUMENTS RELATING TO OR INTENDED TO BE USED FOR ANY PART OR PARTS OF THE PROJECT.

COPYRIGHT 2002 FLETCHER ARCHITECTS, INC.

NO	DATE	REVISIONS
	00/00/01	ADDENDUM #0

PROJECT NO. 2001239
DRAWN BY: JW
CHECKED BY: CF
DATE: NOVEMBER 1, 2002

SHEET NO. **E0.1**

CONSTRUCTION/BID DRAWINGS

SSC Swim, Schuchat, & Cornett Engineering, Inc.
18207 Edison Avenue Chesterfield, Missouri 63005
(636) 530-7770 Fax# (636) 530-7877

2001239\dwg\e0p001_1.dwg

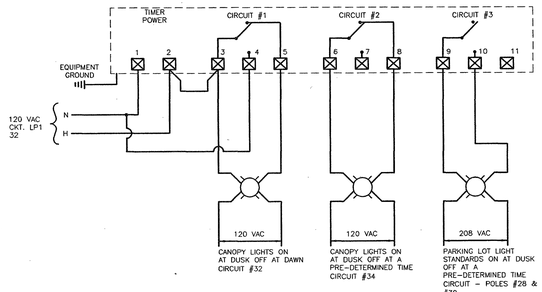

TIME SWITCH A WIRING DIAGRAM

N.T.S.

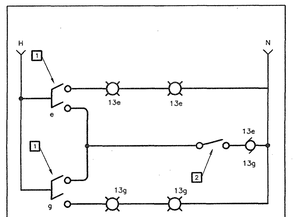

1 DOUBLE POLE-SINGLE THROW SWITCH.
2 BUILT IN SWITCH ON FAN BY M.C.

WIRING DIAGRAM FOR RESTROOMS 117 & 119 LIGHTS & EXH. FAN
NO SCALE

GENERAL NOTES:

1. FOR EXACT LOCATION OF LIGHTING FIXTURES. SEE REFLECTED CEILING PLAN.

ELECTRICAL KEYED NOTES:

1. PROVIDE WITH EMERGENCY BATTERY BACK-UP.
2. PROVIDE -5' STARTING BALLAST IN CANOPY LIGHTS.
3. PROVIDE 3 LEVEL LIGHTING CONTROL FOR GYMNASIUM. EACH FIXTURE TO BE CONNECTED TO 3 SWITCH LEGS. SWITCHES 'a' & 'd' SHALL BE 1P., 20AMP. DIMMERS. LUTRON NTF-10-W.
4. PROVIDE STAGGER STRIP FLUORESCENT FIXTURE IN LENGTHS AS REQUIRED TO EVENLY LAMINATE THE COVE. VERIFY COVE DIMENSIONS DURING CONSTRUCTION.
5. POWER EXHAUST FAN EF-2 FROM TOILET ROOMS SWITCHED LIGHTING CIRCUIT. SEE WIRING DIAGRAM THIS SHEET.
6. POWER EXHAUST FAN EF-3 FROM TOILET ROOMS SWITCHED LIGHTING CIRCUIT.
7. 3-WAY 20AMP. DIMMER.
8. LIGHT FIXTURE ON WITH PHOTO-CELL AND OFF WITH PHOTO-CELL.
9. LIGHT FIXTURE ON WITH PHOTO-CELL AND OFF WITH TIME SWITCH.
10. RECONNECT EXISTING MEN'S TOILET EXHAUST FAN TO MEN'S NEW SWITCHED LIGHTING CIRCUIT.
11. RECONNECT EXISTING WOMEN'S TOILET EXHAUST FAN TO ELEVATOR EQUIPMENT LIGHT FIXTURE CIRCUIT "LP1" 14.
12. POWER EXHAUST FAN EF-1 FROM TOILET ROOM'S SWITCHED LIGHTING CIRCUIT.

ELECTRICAL FIRST FLOOR PLAN - LIGHTING

SCALE: 1/8" = 1' - 0"

THE SEAL AND SIGNATURE APPLY ONLY TO THE DOCUMENT TO WHICH THEY ARE AFFIXED, AND ME EXPRESSLY DISCLAIM ANY RESPONSIBILITY FOR ALL OTHER PLANS, SPECIFICATIONS, ESTIMATES, REPORTS, OR OTHER DOCUMENTS OR INSTRUMENTS RELATING TO OR INTENDED TO BE USED FOR ANY PART OR PARTS OF THE ARCHITECTURAL OR ENGINEERING PROJECT.

J:\2001239\acad\239E1.1.dwg

Fletcher:: Architects, Inc.
ARCHITECTURE ■ PLANNING ■ INTERIORS
1906 NORTH SIGNAL HILLS DRIVE
KIRKWOOD, MO. 63122
TEL. (314) 965-6333
FAX. (314) 965-8997
info@fletcher-architects.com

CONSULTANTS

CIVIL ENGINEER:
FRONTENAC ENGR. GROUP, INC.
16 SUNNEN DR.
ST. LOUIS, MO 63143
PHONE (314) 644-2200
FAX (314) 644-0645

STRUCT. ENGINEER:
ABS CONSULTING
1844 LADKLAND HILLS PARKWAY
ST. LOUIS, MO 63146
PHONE (314) 994-7007
FAX (314) 994-0722

M.E.P. ENGINEER:
SSC ENGINEERING
550 SPIRIT OF ST. LOUIS BLVD.
CHESTERFIELD, MO 63005
PHONE (636) 530-7770
FAX (636) 530-7877

HARDWARE CONSULTANT
8710
5555 PIERRE CT.
ST. LOUIS, MO 63128
PHONE (314) 487-7776
FAX (314) 842-2243

KITCHEN CONSULTANTS
THE GEIGER GROUP
3501 WATSON ROAD
ST. LOUIS, MO 63139
PHONE (314) 645-2987
FAX (314) 645-3208

LANDSCAPE ARCHITECT
AUSTIN TAO. AND ASSOC.
2101 LOCUST, 2ND. FLOOR
ST. LOUIS, MO 63103
PHONE (314) 436-3999
FAX (314) 436-9130

INTERIOR DESIGN
OTOOLE DESIGN ASSOC.
124 WEST JEFFERSON
KIRKWOOD, MO 63122
PHONE (314) 909-1905
FAX (314) 909-1906

PROJECT:
ADDITION AND RENOVATIONS TO
McKnight Road
Church of Christ
2515 SOUTH MCKNIGHT ROAD
ST. LOUIS, MO 63124

THE SEAL AND SIGNATURES APPLY ONLY TO THE DOCUMENT TO WHICH THEY ARE AFFIXED, AND ME EXPRESSLY DISCLAIM ANY RESPONSIBILITY FOR ALL OTHER PLANS, SPECIFICATIONS, ESTIMATES, REPORTS, OR OTHER DOCUMENTS OR INSTRUMENTS RELATING TO OR INTENDED TO BE USED FOR ANY PART OR PARTS OF THE PROJECT.

COPYRIGHT 2002 FLETCHER ARCHITECTS, INC.

NO	DATE	REVISIONS
	02/22/01	ADDENDUM #0

PROJECT NO. 2001239
DRAWN BY: JW/MEG
CHECKED BY: CF
DATE: NOVEMBER 1, 2002

SHEET NO. **E1.1**

CONSTRUCTION/BID DRAWINGS

SSC Swim, Schuchat, & Cornett Engineering, Inc.
18207 Edison Avenue Chesterfield, Missouri 63005
(636) 530-7770 Fax# (636) 530-7877

ELECTRICAL KEYED NOTES:

1. LIGHT FIXTURE ON WITH PHOTO-CELL AND OFF WITH PHOTO-CELL.
2. LIGHT FIXTURE ON WITH PHOTO-CELL AND OFF WITH TIME SWITCH.
3. TYPE "FF" LIGHTS MOUNTED ON SPIRAL FOR LIGHTING OF LETTERS ON 180° WALL. MOUNT 10'-0" ABOVE PAVEMENT.
4. TYPE "GG" LIGHTS MOUNTED ON SPIRAL FOR LIGHTING OF SPIRAL MOUNT 12'-0" ABOVE PAVEMENT.

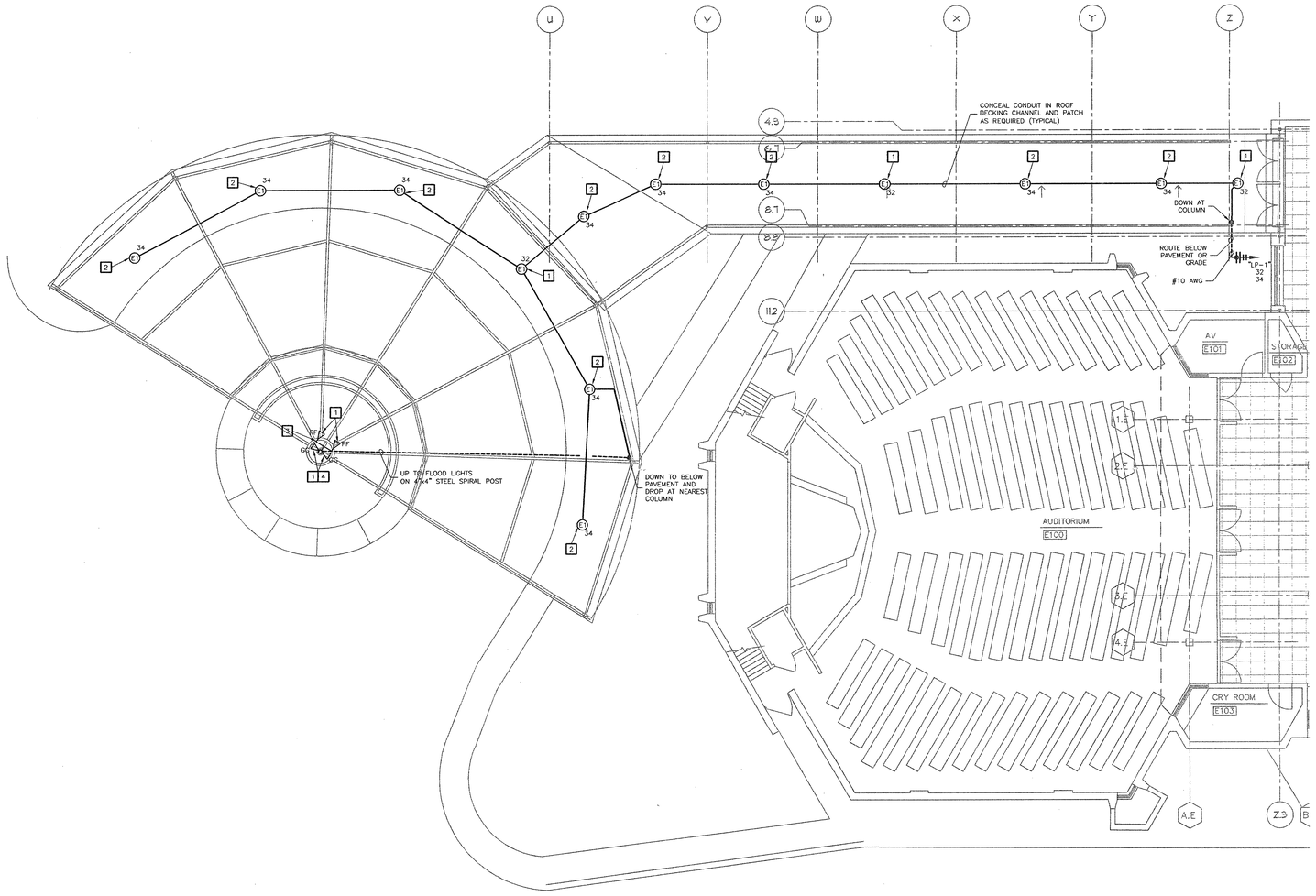

CANOPY PLAN - LIGHTING ALTERNATE #1

SCALE: 1/8" = 1' - 0"

THE SEAL AND SIGNATURES APPLY ONLY TO THE DOCUMENT TO WHICH THEY ARE AFFIXED, AND RE EXPRESSLY DISCLAIM ANY RESPONSIBILITY FOR ALL OTHER DOCUMENTS OR INSTRUMENTS RELATING TO ESTIMATES, REPORTS, OR OTHER DOCUMENTS OR INSTRUMENTS PREPARED BY OTHERS AND NOT TO BE USED FOR ANY PART OR PARTS OF THE ARCHITECTURAL OR ENGINEERING PROJECT.

J:\2001\01\dwg\e01081_2.dwg

Fletcher:: Architects, Inc.

ARCHITECTURE ■ PLANNING ■ INTERIORS
1906 NORTH SIGNAL HILLS DRIVE
KIRKWOOD, MO. 63122
TEL. (314) 965-6333
FAX. (314) 965-8997
info@fletcher-architects.com

CONSULTANTS

CIVIL ENGINEER:
FRONTENAC ENGR. GROUP, INC.
16 SUNNEN DR.
ST. LOUIS, MO 63143
PHONE (314) 644-2200
FAX (314) 644-0645

STRUCT. ENGINEER:
ABS CONSULTING
1844 LACKLAND HILLS PARKWAY
ST. LOUIS, MO 63146
PHONE (314) 994-7007
FAX (314) 994-0722

M.E.P. ENGINEER:
SSC ENGINEERING
550 SPIRIT OF ST. LOUIS BLVD.
CHESTERFIELD, MO 63005
PHONE (636) 530-7770
FAX (636) 530-7877

HARDWARE CONSULTANT
8710
5555 PIERRE CT.
ST. LOUIS, MO 63128
PHONE (314) 487-7776
FAX (314) 842-2242

KITCHEN CONSULTANTS
THE GEIGER GROUP
3501 WATSON ROAD
ST. LOUIS, MO 63139
PHONE (314) 645-2987
FAX (314) 645-3208

LANDSCAPE ARCHITECT
AUSTIN TAO, AND ASSOC.
2101 LOCUST, 2ND. FLOOR
ST. LOUIS, MO 63103
PHONE (314) 436-3899
FAX (314) 436-9130

INTERIOR DESIGN
OTOOLE DESIGN ASSOC.
124 WEST JEFFERSON
KIRKWOOD, MO 63122
PHONE (314) 909-1905
FAX (314) 909-1906

PROJECT:
ADDITION AND RENOVATIONS TO
McKnight Road
Church of Christ
2515 SOUTH MCKNIGHT ROAD
ST. LOUIS, MO 63124

THE SEAL AND SIGNATURES APPLY ONLY TO THE DOCUMENT TO WHICH THEY ARE AFFIXED, AND RE EXPRESSLY DISCLAIM ANY RESPONSIBILITY FOR ALL OTHER DOCUMENTS OR INSTRUMENTS RELATING TO OR OTHER DOCUMENTS OR INSTRUMENTS RELATING TO OR INTENDED TO BE USED FOR ANY PART OR PARTS OF THE PROJECT.

COPYRIGHT 2002 FLETCHER ARCHITECTS, INC.

NO	DATE	REVISIONS
	00/00/01	ADDENDUM #0

PROJECT NO. 2001239
DRAWN BY: JWW
CHECKED BY: BG
DATE: NOVEMBER 1, 2002

SHEET NO. **E1.2**

CONSTRUCTION/BID DRAWINGS

SSC Swim, Schuchat, & Cornett Engineering, Inc.
18207 Edison Avenue Chesterfield, Missouri 63005
(636) 530-7770 Fax# (636) 530-7877

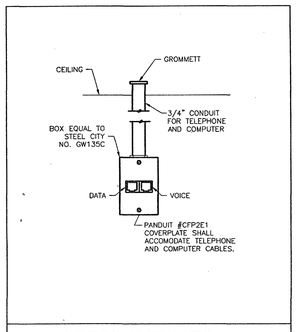

TYPICAL OUTLET BOX AT OFFICE DESKS
NO SCALE

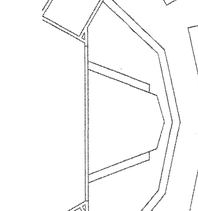

WIRING DIAGRAM A

ELEVATOR MACHINE ROOM KEYED NOTES:

1. LIGHT FIXTURE IN ELEVATOR MACHINE ROOM, DAY-BRITE AW-N-2-32-120-1/2.
2. 120V. GFI DUPLEX RECEPTACLE FOR MAINTENANCE.
3. 1 POLE 20A. SWITCH CONTROLLING LIGHT FIXTURE.
4. LIGHT FIXTURE AND MAINTENANCE RECEPTACLE ON DEDICATED 120V. 1 POLE 20A. CIRCUIT BREAKER.
5. CONDUIT AND BOX FOR TELEPHONE IN ELEVATOR CAR.
6. 120V. DEDICATED CIRCUIT AND 2 POLE 30/20A. FUSIBLE DISCONNECT (USE ONLY 1 POLE) OR 1 POLE 20A. CIRCUIT BREAKER FOR ELEVATOR CAR LIGHT. STUB UP AT ELEVATOR CONTROLLER AND CONNECT TO TERMINALS.
7. FIRE ALARM CONTROL MODULES. SEE WIRING DIAGRAM A.
8. OIL SENSOR AUDIO VISUAL DEVICE BY P.C.
9. DISCONNECT SWITCH. SEE ONE LINE DIAGRAM. PROVIDE SINGLE POLE-IT. SEPERATE DRY AND ISOLATED CONTACT IN ELEVATOR DISCONNECT TO DISABLE EMERGENCY BATTERY RETURN FUNCTION. PROVIDE WIRING AS REQUIRED BY ELEVATOR CONTRACTOR.
10. FEEDER TO PANELBOARD OR SWITCHBOARD. SEE ONE LINE DIAGRAM.
11. ELEVATOR CONTROLLER – STUB UP AND CONNECT TO POWER LUGS.
12. FIRE ALARM SMOKE DETECTOR FOR ELEVATOR RECALL AND ELEVATOR FIREFIGHTERS WARNING LIGHT. PROVIDE WIRING FROM FACP TO ELEVATOR CONTROLLER AS REQUIRED. SEE WIRING DIAGRAM A.

TYPICAL ELEVATOR MACHINE ROOM
NO SCALE

ELECTRICAL KEYED NOTES:

1. OUTLET LOCATED IN BOX WITH LIGHT SWITCH.
2. TELEPHONE TERMINAL BOARD (4'x8')
3. 120 VOLT GFI DUPLEX RECEPTACLE WITH W.P. COVER PLATE FOR HVAC MAINTENANCE.
4. TIME SWITCH 'A' INTERMATIC ET70415CR.
5. CONNECT EXHAUST FAN EF-1 TO SWITCHED LIGHTING CIRCUIT.
6. CONNECT EXHAUST FAN EF-2 TO SWITCHED LIGHTING CIRCUIT. SEE WIRING DIAGRAM SHEET E1.2.
7. CONNECT EXHAUST FAN EF-3 TO SWITCHED LIGHTING CIRCUIT.
8. 120 VOLT DUPLEX RECEPTACLE SHALL REMAIN.
9. PROVIDE SWITCH AND 120 VOLT DUPLEX RECEPTACLE IN SAME 2 GANG BOX.
10. CONNECT TO 1P 20AC BE MADE SPARE BY DEMOLITION. CIRCUIT NUMBERS ARE FOR REFERENCE ONLY.
11. CONNECT TO 2,000 WATT ELECTRIC WATER HEATER EWH-1 ABOVE CEILING.
12. NOT USED.
13. NUTONE P89 LWH WIRELESS PUSHBUTTON.
14. NUTONE LA20WH 3 DOOR CHIME.
15. RECONNECT EXISTING EXHAUST FAN TO 120 VOLT CIRCUIT. INSTALL AND WIRE THERMOSTAT FURNISHED BY M.C.
16. LATHEM DWA-S PROGRAM TIMER.
17. WHEELOCK (43 T-66 115 S) PROGRAM BELL.
18. PROVIDE CEILING INTERCOM SPEAKER AND CONDUIT SPEAKER SHALL MATCH EXISTING.
19. PROVIDE SPEAKER VOLUME CONTROL AND CONDUIT.
20. PROVIDE INTERCOM BOX FOR INTERCOM CONDUIT. INTERCOM WIRE WILL BE PROVIDED BY OWNER.

ELECTRICAL FIRST FLOOR PLAN - POWER AND SYSTEMS
SCALE: 1/8" = 1' - 0"

ELEVATOR PIT KEYED NOTES:

1. LIGHT FIXTURE IN PIT (DAY-BRITE VIS-150-1-12-W) TO BE MOUNTED 6'-0" ABOVE PIT FLOOR.
2. 1 POLE 20 AMP. SWITCH CONTROLLING PIT LIGHT. FIXTURE TO BE MOUNTED 4'-0" ABOVE PIT FLOOR NEAR LADDER OR NEAR PIT DOOR.
3. 120V. GFI DUPLEX RECEPTACLE FOR MAINTENANCE. MOUNT 4'-0" ABOVE PIT FLOOR.
4. LIGHT AND GFI MAINTENANCE RECEPTACLE FOR PIT ON DEDICATED 1 POLE 20 AMP. CIRCUIT BREAKER.
5. 120V. DUPLEX OR TWIST-LOCK RECEPTACLE FOR SUMP PUMP. MOUNT 1'-6" ABOVE PIT FLOOR.
6. SUMP PUMP ON DEDICATED 1 POLE 20 AMP. GFI CIRCUIT BREAKER.
7. SUMP PUMP CONTROLLER. BY P.C. WIRE FROM CONTROLLER OIL SENSOR TO AUDIBLE\VISUAL ALARM IN ELEVATOR MACHINE ROOM.
8. FIRE ALARM SMOKE DETECTOR IN ELEVATOR VESTIBULE FOR ELEVATOR RECALL.

TYPICAL ELEVATOR PIT
NO SCALE

Fletcher:: Architects, Inc.
ARCHITECTURE ■ PLANNING ■ INTERIORS
1906 NORTH SIGNAL HILLS DRIVE
KIRKWOOD, MO. 63122
TEL. (314) 965-6333
FAX. (314) 965-8997
info@fletcher-architects.com

CONSULTANTS

CIVIL ENGINEER:
FRONTENAC ENGR. GROUP, INC.
16 SUNNEN DR.
ST. LOUIS, MO 63143
PHONE (314) 644-2200
FAX (314) 644-0645

STRUCT. ENGINEER:
ABS CONSULTING
1844 LACKLAND HILLS PARKWAY
ST. LOUIS, MO 63146
PHONE (314) 994-7007
FAX (314) 994-0722

M.E.P. ENGINEER:
SSC ENGINEERING
550 SPIRIT OF ST. LOUIS BLVD.
CHESTERFIELD, MO 63005
PHONE (636) 530-7770
FAX (636) 530-7877

HARDWARE CONSULTANT
8710
5555 PIERRE CT.
ST. LOUIS, MO 63128
PHONE (314) 487-7776
FAX (314) 842-2242

KITCHEN CONSULTANTS
THE GEGER GROUP
3501 WATSON ROAD
ST. LOUIS, MO 63139
PHONE (314) 645-2987
FAX (314) 645-3208

LANDSCAPE ARCHITECT
AUSTIN TAO AND ASSOC.
2101 LOCUST, 2ND. FLOOR
ST. LOUIS, MO 63103
PHONE (314) 436-3999
FAX (314) 436-9130

INTERIOR DESIGN
O'DOLE DESIGN ASSOC.
124 WEST JEFFERSON
KIRKWOOD, MO 63122
PHONE (314) 909-1905
FAX (314) 909-1906

PROJECT:
ADDITION AND RENOVATIONS TO
McKnight Road
Church of Christ
2515 SOUTH MCKNIGHT ROAD
ST. LOUIS, MO 63124

THE SEAL AND SIGNATURE APPLY ONLY TO THE DOCUMENT TO WHICH THEY ARE AFFIXED, AND ME EXPRESSLY DISCLAIM ANY RESPONSIBILITY FOR ALL OTHER PLANS, SPECIFICATIONS, ESTIMATES, REPORTS, OR INSTRUMENTS RELATING TO OR INTENDED TO BE USED FOR ANY PART OR PARTS OF THE ARCHITECTURAL OR ENGINEERING PROJECT.

COPYRIGHT 2002 FLETCHER ARCHITECTS, INC.

NO	DATE	REVISIONS
	00/00/01	ADDENDUM #0

PROJECT NO. 2001229
DRAWN BY: JWW
CHECKED BY: CF
DATE: NOVEMBER 1, 2002
SHEET NO. **E1.3**

CONSTRUCTION/BID DRAWINGS

SSC Swim, Schuchat, & Cornett Engineering, Inc.
18207 Edison Avenue Chesterfield, Missouri 63005
(636) 530-7770 Fax# (636) 530-7877

J:\2001\01Revit\2001E1.3.dwg

GENERAL NOTES:

1. ALL FUSES SHALL BE BUSSMAN LPN UNLESS OTHERWISE NOTED.

ELECTRICAL KEYED NOTES:

1. UTILITY TRANSFORMER. SEE SITE PLAN.
2. PROVIDE GROUNDING PER 1999 NEC.
3. THE EXISTING 600 AMP MAIN SERVICE HAS TWO WEATHER HEADS WITH 350 KC MIL INCOMING CABLES EACH SPLICE TO THE EXISTING CABLES TO BACKFEED THE OLD PANEL FROM THE NEW.
4. REMOVE ALL GROUNDING APPARATUS FROM EXISTING MAIN SERVICE PANELBOARD.

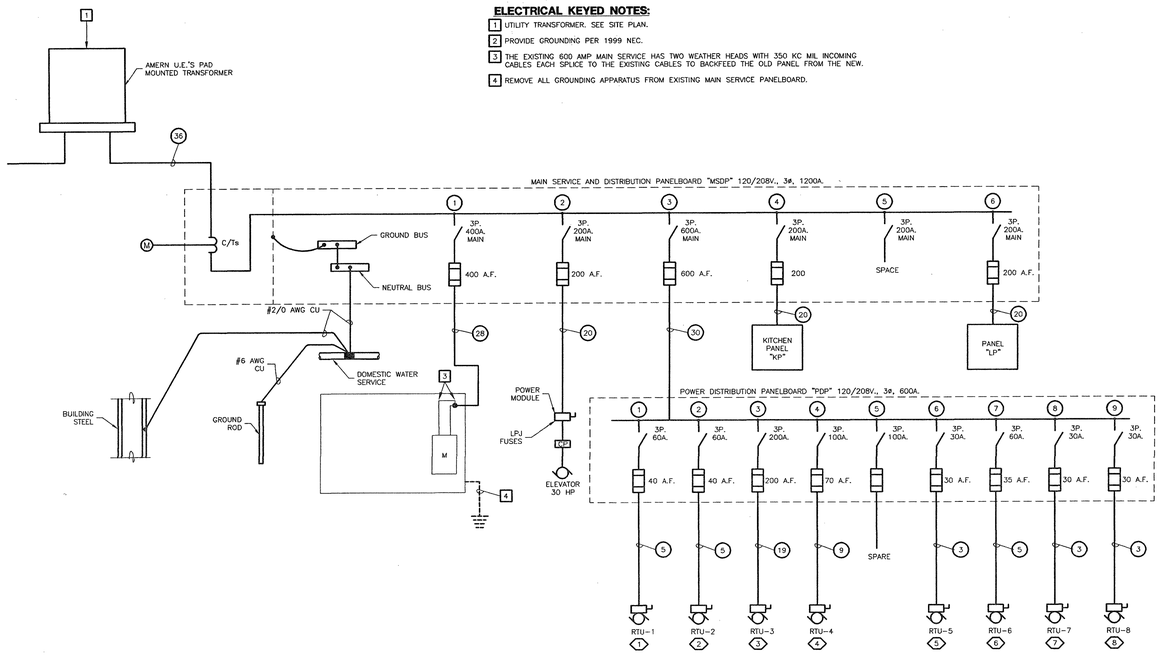

FEEDER SCHEDULE

PLAN MARK	AMPERAGE	FEEDER SIZE
1	20A.	3 #12 & #12G., 3/4"
2	20A.	4 #12 & #12G., 3/4"
3	30A.	3 #10 & #10G., 3/4"
4	30A.	4 #10 & #10G., 3/4"
5	50A.	3 #8 & 1 #10G., 3/4"C.
6	50A.	4 #8 & 1 #10G., 3/4"C.
7	60A.	3 #6 & 1 #10G., 3/4"C.
8	60A.	4 #6 & 1 #10G., 1"C.
9	80A.	3 #4 & 1 #8G., 1-1/4"C.
10	80A.	4 #4 & 1 #8G., 1-1/4"C.
11	100A.	3 #3 & 1 #8G., 1-1/4"C.
12	100A.	4 #3 & 1 #8G., 1-1/4"C.
13	125.A	3 #1 & 1 #6G., 1-1/2"C.
14	125A.	4 #1 & 1 #6G., 1-1/2"C.
15	150A.	3 #1/0 & 1 #6G., 1-1/2"C.
16	150A.	4 #1/0 & 1 #6G., 1-1/2"C.
17	175A.	3 #2/0 & 1 #6G., 2"C.
18	175A.	4 #2/0 & 1 #6G., 2"C.
19	200A.	3 #3/0 & 1 #6G., 2"C.
20	200A.	4 #3/0 & 1 #6G., 2"C.
21	225A.	3 #4/0 & 1 #4G., 2"C.
22	225.A	4 #4/0 & 1 #6G., 2"C.
23	250A.	3-250 MCM & 1 #4G., 2-1/2"C.
24	250A.	4-250 MCM & 1 #4G., 2-1/2"C.
25	300A.	3-350 MCM & 1 #4G., 3"C.
26	300A.	4-350 MCM & 1 #4G., 3"C.
27	400A.	3-500 MCM & 1 #3G., 3"C.
28	400A.	4-500 MCM & 1 #3G., 4"C.
29	600A.	TWO SETS OF 3-350 MCM & 1 #1G., 3"C
30	600A.	TWO SETS OF 4-350 MCM & 1 #1G., 4"C
31	800A.	TWO SETS OF 3-500 MCM & 1 #1/0G., 3"C
32	800A.	TWO SETS OF 4-500 MCM & 1 #1/0G., 4"C
33	1000A.	THREE SETS OF 3-500 MCM & 1 #2/0G., 3"C
34	1000A.	THREE SETS OF 3-500 MCM & 1 #2/0G., 4"C
35	1200A.	FOUR SETS OF 3-350MCM & 1 #3/0G., 3"C.
36	1200A.	FOUR SETS OF 4-350 MCM & 1 #3/0G., 4"C.
37	1600A.	FOUR SETS OF 3-600 MCM & 1 #4/0G., 4"C.
38	1600A.	FOUR SETS OF 4-600 MCM & 1 #4/0G., 4"C.
39	2000A.	SIX SETS OF 4-500 MCM & 1-250G., 3"C.
40	2000A.	SIX SETS OF 4-500 MCM & 1-250G., 4"C.

LIGHTING FIXTURE SCHEDULE

SYMBOL	MANUFACTURER CATALOG NO.	VOLTAGE	LAMP DATA QTY.	LAMP DATA DESCRIPTION	MOUNTING	FINISH	REMARKS
A2	DAY-BRITE	120	2	32W. T8	RECESSED	WHITE	2'x4' RECESSED FLUORESCENT
–	2SPG232-FS-12-UNV-1/2EB	–	–	–	–	–	LENSED TROFFER
A3	DAY-BRITE	120	3	32W. T8	RECESSED	WHITE	2'x4' RECESSED FLUORESCENT
–	2SPG332-FS-12-UNV-1/3EB	–	–	–	–	–	LENSED TROFFER
A4	DAY-BRITE	120	4	32W. T8	RECESSED	WHITE	2'x4' RECESSED FLUORESCENT
–	2SPG432-FS-12-UNV-1/4EB	–	–	–	–	–	LENSED TROFFER
B2	DAY-BRITE	120	2	32W. T8	RECESSED	WHITE	1'x4' RECESSED FLUORESCENT
–	1DG232-FS-12-UNV-1/2EB	–	–	–	–	–	LENSED TROFFER
C2	DAY-BRITE	120	2	31W. T8	RECESSED	WHITE	2'x2' RECESSED FLUORESCENT
–	2SPG31U6-FS-12-UNV-1/2EB	–	–	–	–	–	LENSED TROFFER
D2	DAY-BRITE	120	2	32W. T8	SURFACE	WHITE	14"x4' WRAP-A-ROUND
–	OWW 232-UNV-1/2EB	–	–	–	–	–	FLUORESCENT FIXTURE
E1	DAY-BRITE	120	1	70W. M.H.	SURFACE	WHITE	SURFACE MOUNTED CANOPY LIGHT
–	DSS070M120-DPM	–	–	–	–	–	–
F1	INTREPID	120	9	LAMPS	CEILING	WHITE	HIGH BAY FLUORESCENT
–	PMD-9/368X-120-ERS/EDM-PML-HK	–	–	–	HOOK	–	3 LEVEL SWITCHING
–	–	–	–	–	–	–	USE LUTRON ECO-10 BALLAST
G1	DAY-BRITE	208	1	250W.	POLE	BRONZE	SHOE BOX FIXTURE
–	SBX-250M-12-MC3-MCLTA10S/	–	–	METAL HALIDE	–	–	ON 16' POLE
–	SQS415G11-D12/BRZ	–	–	–	–	–	–
G2	DAY-BRITE	208	1	250W.	POLE	BRONZE	FLOOD LIGHT MTD. ON TYPE G1
–	FLI-250M-MT-1SFBRZ	–	–	METAL HALIDE	–	–	POLE. SEE DETAIL ON DWG E0.1
X	EMERGI-LITE	120	–	LED	SURFACE	WHITE	UNIVERSAL
–	ELXN-400-R	–	–	–	–	W/ RED	–
–	–	–	–	–	–	LETTERS	–
RA	OMEGA OM6250	120	1	250W.	RECESS	WHEAT	RECESSED INCANDESCENT
–	PAR 38-WT	–	–	PAR 38	–	–	DOWNLIGHT
TA	OMEGA OM82H2	120	2	26W.	RECESS	WHEAT	COMPACT FLUORESCENT
–	QPL-WT	–	–	QU-T4	–	–	DOWNLIGHT
EE	DAY-BRITE	120	1	150W.	SURFACE	ALUM.	DIE CAST CEILING MOUNTED
–	V1S1501-12-C-6	–	–	A-21	CLG.	–	INCANDESCENT FIXTURE
FF	GARDCO	120	1	175W.	SPIRAL	DARK	MOUNT ON SPIRAL 10'-0"
–	DF7-HFL-175MH-120-BRP	–	–	METAL HALIDE	–	BRONZE	ABOVE PAVEMENT
GG	GARDCO	120	1	39W.	SPIRAL	DARK	MOUNT ON SPIRAL 12'-0"
–	DSP5-U-PAR 30-BRP	–	–	METAL HALIDE	–	BRONZE	ABOVE PAVEMENT
HH	SE' LUX M10	120	–	32W. T8	PENDANT	WHITE	MOUNT 8'-0" A.F.F. FLOOR TO
–	1T8-MP-C-XXX-WH-120	–	–	–	–	–	BOTTOM OF FIXTURE

NOTE:
1. EQUAL LIGHT FIXTURES BY HUBBELL AND COOPER WILL BE ACCEPTED.

ELECTRICAL SYMBOLS LEGEND

LIGHTING FIXTURES

AA3	FLUORESCENT FIXTURE – CEILING MOUNTED. ALPHA-NUMERIC DESIGNATION DENOTES TYPE; SEE LIGHTING FIXTURE SCHEDULE FOR DESCRIPTION.
BB2	FLUORESCENT FIXTURE – AS ABOVE – WALL MOUNTED 84" AFF (U.N.O).
C	INCANDESCENT, FLUORESCENT OR H.I.D. FIXTURE – AS ABOVE – CEILING MOUNTED OR PENDANT MOUNTED TO HEIGHT INDICATED.
D	WALL MOUNTED FIXTURE – AS ABOVE – 78" A.F.F. (U.N.O.).
	EXIT LIGHT – CEILING MOUNTED; WALL MOUNT 7'-6" AFF OR ABOVE DOOR SHADED PORTION INDICATES FACE; WITH DIRECTIONAL ARROW(S) AS INDICATED. FIXTURE TYPE "X" (U.N.O.).
	COMBINATION EXIT LIGHT WITH EMERGENCY LIGHTING HEADS. FIXTURE TYPE "X1" (U.N.O.).
	EMERGENCY LIGHT – BATTERY OPERATED – WALL MOUNTED 84" AFF (U.N.O.). FIXTURE TYPE "Y" (U.N.O.).
	BOLLARD FIXTURE.
	LIGHT POLE WITH SINGLE HEAD LUMINAIRE.
	LIGHT POLE WITH TWO LUMINAIRES (OR MORE AS INDICATED).
	SHADING DENOTES EMERGENCY FIXTURE.
1a,b NL	FIXTURE CIRCUITRY NOTATION: 1 – CIRCUIT NUMBER TO WHICH FIXTURE IS CONNECTED a,b – LETTER(S) OF SWITCH(ES) CONTROLLING FIXTURE NL – NIGHT LIGHT (UNSWITCHED CIRCUIT)

WIRING DEVICES

$a	SINGLE POLE SWITCH – "a" INDICATES SWITCH LEG – MOUNT 48" AFF.
$3	THREE-WAY SWITCH – AS ABOVE.
TS	TIME SWITCH – MOUNT 60" AFF.
PC	PHOTOCELL MOUNTED IN WP OUTLET BOX LOCATED ON ROOF, FACING NORTH, (U.N.O.).
LV	LIGHTING CONTACTOR FOR NUMBER OF CIRCUITS AS INDICATED ON PLAN.
	JUNCTION BOX OR POINT OF CONNECTION – MOUNT 18" AFF OR AT HEIGHT REQUIRED BY RESPECTIVE EQUIPMENT ITEM MANUFACTURER.
	DUPLEX RECEPTACLE – MOUNT 18" AFF.
	DOUBLE DUPLEX RECEPTACLE – AS ABOVE.
	DUPLEX RECEPTACLE AS ABOVE – SPLIT WIRED, TOP HALF SWITCHED .
	DUPLEX 6" ABOVE COUNTER OR WALL HUNG LAVATORY.
	SPECIAL PURPOSE OUTLET – MOUNT 18" AFF.

MOTORS AND EQUIPMENT

30/20/3	DISCONNECT SWITCH (FUSED OR NON-FUSED AS INDICATED) – MOUNT 60" AFF. 30/20/3 INDICATES SWITCH AMPS/FUSE AMPS/POLES.
	MOTOR STARTER, NEMA SIZE TO SUIT EQUIPMENT SERVED, WITH HAND-OFF-AUTO SELECTOR SWITCH, (U.N.O.).
	COMBINATION MOTOR STARTER, AS ABOVE AND DISCONNECT SWITCH.
30/2 ECB	ENCLOSED CIRCUIT BREAKER; AMPS/POLES RATING AS INDICATED.
$M	MANUAL MOTOR STARTER WITH OVERLOAD PROTECTION – MOUNT ON SIDE OF UNIT OR AT 48" AFF.
MS	CONTROL PANEL FOR EQUIPMENT ITEM INDICATED ON PLAN.
VFD	VARIABLE FREQUENCY DRIVE FOR EQUIPMENT ITEM INDICATED ON PLAN.
	MULTIPLE PUSH BUTTONS – MOUNT 48" AFF, AS INDICATED (U.N.O.).
	ELECTRIC MOTOR.
	NEW BRANCH CIRCUIT PANELBOARD – MOUNT TOP 78" AFF.
	EXISTING BRANCH CIRCUIT PANELBOARD – MOUNT TOP 78" AFF.
MDP	SWITCHBOARD, DISTRIBUTION PANEL OR MOTOR CONTROL CENTER.
	DRY-TYPE TRANSFORMER.
	KILOWATT HOUR METER BASE.

CIRCUITRY DESIGNATIONS

	BRANCH CIRCUITRY. CONCEALED IN WALLS OR ABOVE CEILINGS. ARROW INDICATES HOME RUN TO PANEL. SHORT SLASH MARKS INDICATE "HOT" WIRES, LONG SLASH MARK INDICATES "NEUTRAL" WIRE, LONG SLASH WITH SOLID CIRCLE INDICATES GREEN GROUNDING CONDUCTOR.
	BRANCH CIRCUITRY AS ABOVE, CONCEALED IN FLOOR SLAB OR UNDERGROUND.
	BRANCH CIRCUITRY AS ABOVE, EXPOSED ON WALLS OR STRUCTURE.
	CIRCUITRY UP – CIRCUITRY DOWN.

FIRE ALARM SYSTEM

FACP	FIRE ALARM CONTROL PANEL – MOUNT TOP 72" AFF.
FAAP	FIRE ALARM ANNUNCIATOR PANEL – MOUNT TOP 72" AFF.
F	MANUAL PULL STATION – MOUNT 48" AFF.
	SMOKE DETECTOR – CEILING MOUNTED.
SD	DUCT MOUNTED SMOKE DETECTOR WITH SAMPLING TUBES.
FA	DUCT MOUNTED SMOKE DETECTOR'S REMOTE ANNUNCIATOR LAMP AND TEST SWITCH-MOUNT ON CEILING, (U.N.O.).
	HEAT DETECTOR – CEILING MOUNTED (U.N.O.).
F 15/75	VISUAL FLASHER – MOUNT 80" AFF TO BOTTOM OF FLASHER; (NUMERALS INDICATE CANDELLA).
FV	HORN – MOUNT 90" AFF; V DENOTES COMBINATION VISUAL FLASHER/HORN.
FR	INTERFACE RELAY FOR CODE REQUIRED ACTION, OR AS NOTED ON PLANS; SEE SPECIFICATION.
FCM	CONTROL MODULE FOR CODE REQUIRED ACTION; SEE SPECIFICATION.
FMM	MONITOR MODULE FOR CODE REQUIRED ACTION, OR AS NOTED ON PLANS; SEE SPECIFICATION.

AUXILIARY SYSTEMS

	SPEAKER – CEILING MOUNTED.
	SPEAKER – WALL MOUNT 84" AFF.
IC	INTERCOM STATION – MOUNT 48" AFF.
	TELEPHONE OUTLET – MOUNT 18" AFF; F INDICATES FAX MACHINES, W INDICATES WALL MOUNT 54" AFF, P INDICATES WALL MOUNT FOR PAY PHONE.
	DATA OUTLET – MOUNT 18" AFF.
	COMBINATION TELEPHONE AND DATA OUTLET – MOUNT 18" AFF.
TTB	TELEPHONE TERMINAL BOARD – 3/4" PLYWOOD, 4' x 8' (U.N.O.).
TTC	TELEPHONE TERMINAL CABINET 24" x 36" x 6" (U.N.O.) WITH PLYWOOD BACK AND HINGED DOOR WITH KEY LOCK.
TV	T.V. OUTLET – MOUNT 18" AFF U.N.O.
CK	CLOCK OUTLET – MOUNT 78" AFF U.N.O.

ABBREVIATIONS

AFF	ABOVE FINISHED FLOOR.
EC	ELECTRICAL CONTRACTOR.
EM	EMERGENCY.
EWC	ELECTRIC WATER COOLER. ROUGH-IN RECEPTACLE INCONSPICUOUSLY; COORDINATE WITH PC.
EWH	ELECTRIC WATER HEATER.
EX	EXISTING.
FPC	FIRE PROTECTION CONTRACTOR.
FSS	FUSIBLE SAFETY SWITCH.
GC	GENERAL CONTRACTOR.
GFI	GROUND FAULT CIRCUIT INTERRUPTER TYPE DEVICE, (U.N.O.).
H.I.D.	HIGH INTENSITY DISCHARGE.
I.G.	ISOLATED GROUND TYPE DEVICE.
KEC	KITCHEN EQUIPMENT CONTRACTOR.
MAX	MAXIMUM.
MC	MECHANICAL CONTRACTOR.
MFR	MANUFACTURER.
MIN	MINIMUM.
NF	NON-FUSED SWITCH.
PC	PLUMBING CONTRACTOR.
T	TAMPER PROOF TYPE DEVICE.
U.N.O.	UNLESS NOTED OTHERWISE.
WP	WEATHERPROOF.

MISCELLANEOUS

XXX X-X	MECHANICAL EQUIPMENT ITEM IDENTIFICATION PER EQUIPMENT SCHEDULE ON MECHANICAL DRAWINGS.
	MISCELLANEOUS EQUIPMENT NUMBER. SEE MISCELLANEOUS EQUIPMENT SCHEDULE.

Fletcher:: Architects, Inc.

ARCHITECTURE ■ PLANNING ■ INTERIORS
1905 NORTH SIGNAL HILLS DRIVE
KIRKWOOD, MO. 63122
TEL. (314) 965-6333
FAX. (314) 965-8997
info@fletcher-architects.com

CONSULTANTS

CIVIL ENGINEER:
FRONTENAC ENGR. GROUP, INC.
16 SUNNEN DR.
ST. LOUIS, MO 63143
PHONE (314) 644-2200
FAX (314) 644-0649

STRUCT. ENGINEER:
ABS CONSULTING
1844 LACKLAND HILLS PARKWAY
ST. LOUIS, MO 63146
PHONE (314) 994-7007
FAX (314) 994-0722

M.E.P. ENGINEER:
SSC ENGINEERING
550 SPIRIT OF ST. LOUIS BLVD.
CHESTERFIELD, MO 63005
PHONE (636) 530-7770
FAX (636) 530-7877

HARDWARE CONSULTANT
8710
5555 PIERRE CT.
ST. LOUIS, MO 63128
PHONE (314) 487-7776
FAX (314) 842-2242

KITCHEN CONSULTANTS
THE GEIGER GROUP
3501 WATSON ROAD
ST. LOUIS, MO 63139
PHONE (314) 645-2987
FAX (314) 645-3208

LANDSCAPE ARCHITECT
AUSTIN TAO AND ASSOC.
2101 LOCUST, 2ND. FLOOR
ST. LOUIS, MO 63103
PHONE (314) 436-3999
FAX (314) 436-9130

INTERIOR DESIGN
O'TOOLE DESIGN ASSOC.
124 WEST JEFFERSON
KIRKWOOD, MO 63122
PHONE (314) 909-1905
FAX (314) 909-1906

PROJECT:
ADDITION AND RENOVATIONS TO
McKnight Road Church of Christ
2515 SOUTH MCKNIGHT ROAD
ST. LOUIS, MO 63124

THE SEAL AND SIGNATURE APPLY ONLY TO THE DOCUMENT TO WHICH THEY ARE AFFIXED, AND THE ARCHITECT EXPRESSLY DISCLAIMS ANY RESPONSIBILITY FOR ALL OTHER PLANS, SPECIFICATIONS, ESTIMATES, REPORTS, OR OTHER DOCUMENTS OR INSTRUMENTS RELATING TO OR INTENDED TO BE USED FOR ANY PART OR PARTS OF THE ARCHITECTURAL OR ENGINEERING PROJECT.

THE SEAL AND SIGNATURES APPLY ONLY TO THE DOCUMENT TO WHICH THEY ARE AFFIXED, AND WE EXPRESSLY DISCLAIM ANY RESPONSIBILITY FOR ALL OTHER PLANS, SPECIFICATIONS, ESTIMATES, REPORTS, OR OTHER DOCUMENTS OR INSTRUMENTS RELATING TO OR INTENDED TO BE USED FOR ANY PART OR PARTS OF THE PROJECT.

COPYRIGHT 2002 FLETCHER ARCHITECTS, INC.

NO	DATE	REVISIONS
	00/00/01	ADDENDUM #0

PROJECT NO. 2001239
DRAWN BY: JWW
CHECKED BY: BG
DATE: NOVEMBER 1, 2002

SHEET NO. E2.1

CONSTRUCTION/BID DRAWINGS

SSC Swim, Schuchat, & Cornett Engineering, Inc.
18207 Edison Avenue Chesterfield, Missouri 63005
(636) 530-7770 Fax# (636) 530-7877

J:\2001\01\dwg\e013952.dwg

KITCHEN EQUIPMENT SCHEDULE

ITEM NO.	DESCRIPTION	VOLTAGE/ø	KW	HP	AMPS	PANEL	CIRCUIT NO.	CIRCUIT BREAKER SIZE	CIRCUIT BREAKER POLES	REMARKS
(E1)	FREEZER-REACH-IN	120/1	–	–	12	"KP"	16	20	1	W/ PLUG & CORD PROVIDE SINGLE RECEPTACLE
(E2)	REFRIGERATOR-REACH-IN	120/1	–	–	12	"KP"	18	20	1	W/ PLUG & CORD PROVIDE SINGLE RECEPTACLE
(E3)	RANGE	208/1	11	–	52.8	"KP"	13,15	70	2	W/ PLUG & CORD PROVIDE SINGLE RECEPTACLE-PROVIDE SHUNT TRIP BREAKER
(E4)	CONVECTION OVEN	208/1	6.8	–	32.6	"KP"	19,21	40	2	DIRECT CONNECTION
(E5)	EXHAUST HOOD LIGHTS	120/1	–	–	2.0	"KP"	25	20	1	DIRECT CONNECTION AT CEILING +110" FROM ABOVE, PROVIDE SHUNT TRIP BREAKER
(E6)	FIRE SUPPRESSION SYSTEM	120/1	–	–	–	"KP"	27	20	1	DIRECT CONNECTION AT CEILING +110" FROM ABOVE
(E7)	HOOD LIGHT & FAN SWITCH	120/1	–	–	–	"KP"	–	–	–	–
(E8)	SUPPLY AIR	–	–	–	–	–	–	–	–	–
(E9)	COLD FOOD STATION	120/1	–	–	7	"KP"	32	20	1	W/ PLUG & CORD
(E10)	HOT FOOD STATION-MOBILE	208/1	4	–	19.2	"KP"	39,41	30	2	W/ PLUG & CORD
(E11)	HOT FOOD CABINET	120/1	4	–	33.3	"KP"	–	–	–	W/ PLUG & CORD
(E12)	DISH MACHINE	120/208/1	9.3	–	38.9	"KP"	35,37	50	2	PROVIDE NEMA 4 DISCONNECT & CONNECT
(E13)	DISPOSER	208/1	–	2	–	"KP"	31,33	30	2	PROVIDE NEMA 4 DISCONNECT & CONNECT WIRE SOLENOID
(E14)	MICROWAVE OVEN	120/1	–	–	16.0	"KP"	34,36	20	1	W/ PLUG & CORD
(E15)	CONVENIENCE RECEPTACLE	120/1	–	–	16.0	"KP"	–	20	1	–
–	–	–	–	–	–	–	–	–	–	–
–	–	–	–	–	–	–	–	–	–	–
–	–	–	–	–	–	–	–	–	–	–
–	–	–	–	–	–	–	–	–	–	–

KITCHEN PLAN KEYED NOTES:

1. 120 VOLT CIRCUIT AND TOGGLE SWITCH FOR WATER HEATER GWH-1.
2. 120 VOLT CIRCUIT AND TOGGLE SWITCH FOR CIRC. PUMP CP-1.

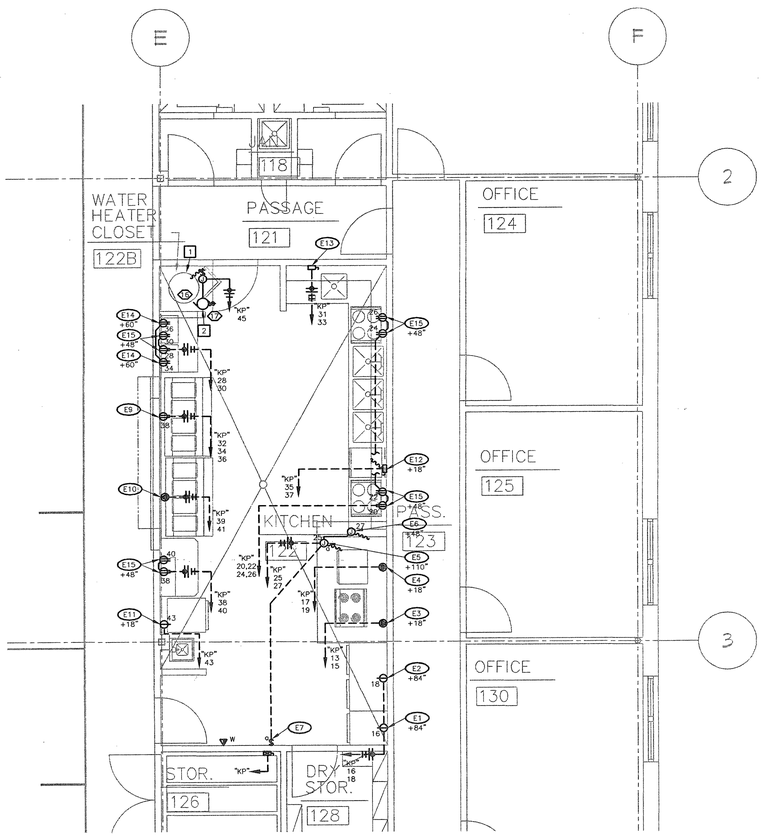

ELECTRICAL FIRST FLOOR POWER PLAN

SCALE: 1/4" = 1' – 0"

PANEL "KP" (SECTION 1) LOCATED IN STORAGE RM. 126 SURFACE X
BUS 225A MAIN C/B 225A 120/208V., 3 PHASE, 4 WIRE RECESSED –

DESCRIPTION	VOLTAMPS/PHASE A	B	C	WIRE	BKR AMP	POLE	CKT NO.	CKT NO.	POLE	BKR AMP	WIRE	VOLTAMPS/PHASE A	B	C	DESCRIPTION
6 DUPLEX RECEPTS.	1200			12	20	1	1	2	1	20	12	600			3 DUPLEX RECEPTS.
1 GFI DUPLEX RECEPT.		1400		12	20	1	3	4	1	20	12		1000		5 DUPLEX RECEPTS.
1 GFI DUPLEX RECEPT.			1400	12	20	1	5	6	1	20	12			600	3 DUPLEX RECEPTS.
2 FOURPLEX RECEPTS.	800			12	20	1	7	8	1	20	12	1000			5 DUPLEX RECEPTS.
4 DUPLEX RECEPTS.		800		12	20	1	9	10	1	20	12		600		FIRE ALARM PANEL
3 DUPLEX RECEPTS.			600	12	20	1	11	12	1	20	12			800	4 DUPLEX RECEPTS.
* RANGE	5500			6	20	1	13	14	1	20	12	600			1 EXIT DUPLEX RECEPTS.
–		5500		–	20	1	15	16	1	20	12		1440		REFRIGERATOR
			–	–	20	1	17	18	1	20	12			1440	FREEZER
* CONVECTION OVEN	3400			8	20	1	19	20	1	20	12	1920			DUPLEX RECEPTACLE
–		–		–	20	1	21	22	1	20	12		1920		DUPLEX RECEPTACLE
			–	–	20	1	23	24	1	20	12			1920	DUPLEX RECEPTACLE
* HOOD LIGHTS	–			12	20	1	25	26	1	20	12	1920			DUPLEX RECEPTACLE
		–		12	20	1	27	28	1	20	12		1920		DUPLEX RECEPTACLE
FIRE SUPPRESSION			–	12	20	1	29	30	1	20	12			1920	DUPLEX RECEPTACLE
SUBTOTAL	10900	7700	2000	TOTAL PHASE A = 16940								6040	6880	6680	SUBTOTAL
				TOTAL PHASE B = 14580											
				TOTAL PHASE C = 8680											
				TOTAL PANEL = 40200											

* SHUNT TRIP BREAKER

NOTE: PANELBOARD SHOP DRAWINGS SHALL MATCH PANELBOARD CIRCUIT NUMBERS.

PANEL "KP" (SECTION 2) LOCATED IN STORAGE RM. 126 SURFACE X
BUS 225A MAIN C/B 225A 120/208V., 3 PHASE, 4 WIRE RECESSED –

DESCRIPTION	VOLTAMPS/PHASE A	B	C	WIRE	BKR AMP	POLE	CKT NO.	CKT NO.	POLE	BKR AMP	WIRE	VOLTAMPS/PHASE A	B	C	DESCRIPTION
DISPOSER	1435			10	30	2	31	32	1	20	12	840			COLD FOOD STATION
–		1435		–	–	–	33	34	1	20	12		1920		MICROWAVE
DISH MACHINE			4650	6	50	2	35	36	1	20	12			1920	MICROWAVE
–	4650			–	–	–	37	38	1	20	12	1920			DUPLEX RECEPTACLE
FOOD STATION		2000		12	20	1	39	40	1	20	12		1920		DUPLEX RECEPTACLE
–			2000	12	20	1	41	42	1	20	12			4000	HOT FOOD CABINET
HOT FOOD CABINET	1200			8	45	1	43	44	1	20	12	–			HOOD EXHAUST FAN
GAS WTR HTR & PUMP		600		12	20	1	45	46	1	20	12		–		–
SPARE			–	–	20	1	47	48	1	20	12			–	–
SPARE	–			–	20	1	49	50	1	20	–	–			SPARE
SPARE		–		–	20	1	51	52	1	20	–		–		SPARE
SPACE ONLY			–	–	20	1	53	54	1	20	–			–	SPACE ONLY
SPACE ONLY	–			–	20	1	55	56	1	20	–	–			SPACE ONLY
SPACE ONLY		–		–	20	1	57	58	1	20	–		–		SPACE ONLY
SPACE ONLY			–	–	20	1	59	60	1	20	–			–	SPACE ONLY
SUBTOTAL	7285	4035	2760	TOTAL PHASE A = 10045								2760	3840	5920	SUBTOTAL
				TOTAL PHASE B = 7875											
				TOTAL PHASE C = 8680											
				TOTAL PANEL = 26600											

PANEL "LP1" (SECTION 1) LOCATED IN STORAGE RM. 113 SURFACE X
BUS 225A MAIN C/B 225A 120/208V., 3 PHASE, 4 WIRE RECESSED –

DESCRIPTION	VOLTAMPS/PHASE A	B	C	WIRE	BKR AMP	POLE	CKT NO.	CKT NO.	POLE	BKR AMP	WIRE	VOLTAMPS/PHASE A	B	C	DESCRIPTION
FELLOWSHIP HALL LTS.	1525			12	20	1	1	2	1	20	12	1525			FELLOWSHIP HALL LTS.
FELLOWSHIP HALL LTS.		1830		12	20	1	3	4	1	20	12		1830		FELLOWSHIP HALL LTS.
FELLOWSHIP HALL LTS.			1830	12	20	1	5	6	1	20	12			1830	FELLOWSHIP HALL LTS.
INF. AND CL. RM.	1620			12	20	1	7	8	1	20	12	1320			STORAGE & OFFICE LTS.
TOD. AND CL. RM.		1410		12	20	1	9	10	1	20	12		1200		EDME WORK LTS.
ACTIVITY CENTER			1620	12	20	1	11	12	1	20	12			1200	OFF. & UB LTS.
CANOPY LIGHTS	1300			12	20	1	13	14	1	20	12	1860			FELLOWSHIP COMM. LTS.
3 DUPLEX RECEPTS.		600		12	20	1	15	16	1	20	12		1080		LOBBY LIGHTS
4 DUPLEX RECEPTS.			800	12	20	1	17	18	1	20	12			1380	EXISTING LOBBY LTS.
4 DUPLEX RECEPTS.	800			12	20	1	19	20	1	20	12	1200			6 DUPLEX RECEPTS.
4 DUPLEX RECEPTS.		800		12	20	1	21	22	1	20	12		1400		7 DUPLEX RECEPTS.
5 DUPLEX RECEPTS.			1000	12	20	1	23	24	1	20	12			600	1 EXISTING DUPLEX RECPT.
ELECTRIC HEATER EH-1	1250			12	20	1	25	26	1	20	12	675			EWC
ELECTRIC HEATER EH-2		1250		12	20	1	27	28	2	20	10		1400		PARKING LIGHTS
RTU RECPTS.			600	12	20	1	29	30	–	–	–			1400	----------
SUBTOTAL	6495	5890	5850	TOTAL PHASE A = 13075								6580	6910	6410	SUBTOTAL
				TOTAL PHASE B = 12800											
				TOTAL PHASE C = 12260											
				TOTAL PANEL = 38135											

NOTE: PANELBOARD SHOP DRAWINGS SHALL MATCH PANELBOARD CIRCUIT NUMBERS.

PANEL "LP1" (SECTION 2) LOCATED IN STORGE RM. 113 SURFACE X
BUS 225A MAIN C/B 225A 120/208V., 3 PHASE, 4 WIRE RECESSED –

DESCRIPTION	VOLTAMPS/PHASE A	B	C	WIRE	BKR AMP	POLE	CKT NO.	CKT NO.	POLE	BKR AMP	WIRE	VOLTAMPS/PHASE A	B	C	DESCRIPTION
RTU RECPTS.	600			12	20	1	31	32	1	20	12	600			ELEV. PIT LT. & RECEPT.
ELEC. WTR. HTR. EWH-1		2000		12	20	1	33	34	1	20	12		1176		ELEV. SUMP PUMP
SPARE			–	–	20	1	35	36	1	20	12			300	ELEV. CAR LIGHT
BASKETBALL BACKBOARD	500			10	30	3	37	38	3	30	10	500			BASKETBALL BACKBOARD
--------		500		–	–	–	39	40	–	–	–		500		--------
--------			500	–	–	–	41	42	–	–	–			500	--------
ELEV. MACH. LT & RECPT.	600			12	20	1	43	44	1	20	–	–			SPARE
SPARE		–		–	20	1	45	46	1	20	–		–		SPARE
SPARE			–	–	20	1	47	48	1	20	–			–	SPARE
SPARE	–			–	20	1	49	50	1	20	–	–			SPACE ONLY
SPACE ONLY		–		–	20	1	51	52	1	20	–		–		SPACE ONLY
SPACE ONLY			–	–	20	1	53	54	1	20	–			–	SPACE ONLY
SPACE ONLY	–			–	20	1	55	56	1	20	–	–			SPACE ONLY
SPACE ONLY		–		–	20	1	57	58	1	20	–		–		SPACE ONLY
SPACE ONLY			–	–	20	1	59	60	1	20	–			–	SPACE ONLY
SUBTOTAL	1700	2500	500	TOTAL PHASE A = 2800								1100	1676	800	SUBTOTAL
				TOTAL PHASE B = 4176											
				TOTAL PHASE C = 1300											
				TOTAL PANEL = 8276											

THE SEAL AND SIGNATURE APPLY ONLY TO THE DOCUMENT TO WHICH THEY ARE AFFIXED, AND DO NOT EXTEND TO ANY REVISIONS, ADDITIONS OR DELETIONS TO THE DOCUMENT MADE BY OTHERS. FOR ALL OTHER PLANS, SPECIFICATIONS, REPORTS OR DOCUMENTS PREPARED BY THE ARCHITECT, NO REPRESENTATIONS REGARDING INSTRUMENTS RELATING TO OR INTENDED FOR USE ON THIS PROJECT ARE MADE BY THE ARCHITECTURAL OR ENGINEERING PROJECT.

J:\2001239\Arch\123ED3_0.dwg

Fletcher:: Architects, Inc.

ARCHITECTURE ■ PLANNING ■ INTERIORS
1906 NORTH SIGNAL HILLS DRIVE
KIRKWOOD, MO. 63122
TEL. (314) 965-6333
FAX. (314) 965-8997
info@fletcher-architects.com

CONSULTANTS

CIVIL ENGINEER:
FRONTENAC ENGR. GROUP, INC.
16 SUNNEN DR.
ST. LOUIS, MO 63143
PHONE (314) 644-2200
FAX (314) 644-0645

STRUCT. ENGINEER:
ABS CONSULTING
1844 LACKLAND HILLS PARKWAY
ST. LOUIS, MO 63146
PHONE (314) 994-7007
FAX (314) 994-0722

M.E.P. ENGINEER:
SSC ENGINEERING
550 SPIRIT OF ST. LOUIS BLVD.
CHESTERFIELD, MO 63005
PHONE (636) 530-7770
FAX (636) 530-7877

HARDWARE CONSULTANT
8710
5555 PIERRE CT.
ST. LOUIS, MO 63128
PHONE (314) 487-7776
FAX (314) 842-2242

KITCHEN CONSULTANTS
THE GEIGER GROUP
3501 WATSON ROAD
ST. LOUIS, MO 63139
PHONE (314) 645-2087
FAX (314) 645-3208

LANDSCAPE ARCHITECT
AUSTIN TAO AND ASSOC.
2101 LOCUST, 2ND. FLOOR
ST. LOUIS, MO 63103
PHONE (314) 436-3999
FAX (314) 436-9130

INTERIOR DESIGN
OTOOLE DESIGN ASSOC.
124 WEST JEFFERSON
KIRKWOOD, MO 63122
PHONE (314) 909-1905
FAX (314) 909-1906

PROJECT:
ADDITION AND RENOVATIONS TO
McKnight Road Church of Christ
2515 SOUTH MCKNIGHT ROAD
ST. LOUIS, MO 63124

THE SEAL AND SIGNATURES APPLY ONLY TO THE DOCUMENT TO WHICH THEY ARE AFFIXED, AND WE EXPRESSLY DISCLAIM ANY RESPONSIBILITY FOR ALL OTHER PLANS, SPECIFICATIONS, ESTIMATES, REPORTS OR OTHER DOCUMENTS OR INFORMATION RELATIVE TO OR INTENDED TO BE USED FOR ANY PART OR PARTS OF THE PROJECT.

COPYRIGHT 2002 FLETCHER ARCHITECTS, INC.

NO.	DATE	REVISIONS
	00/00/01	ADDENDUM #0

PROJECT NO. 2001239
DRAWN BY: JWW
CHECKED BY: CF
DATE: NOVEMBER 1, 2002

SHEET NO. **E3.0**

CONSTRUCTION/BID DRAWINGS

SSC Swim, Schuchat, & Cornett Engineering, Inc.
18207 Edison Avenue Chesterfield, Missouri 63005
(636) 530-7770 Fax# (636) 530-7877

CONTROL DIAGRAMS

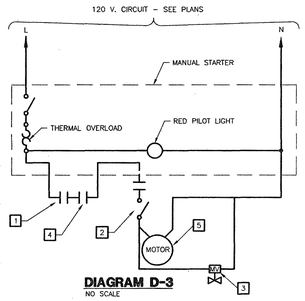

DIAGRAM D-3
NO SCALE

TYPICAL CABINET UNIT HEATER

NOTES:

1. CONTROL DEVICE SUCH AS THERMOSTAT, FURNISHED BY M.C., WIRED BY E.C. (WHEN REQUIRED).
2. DISCONNECT AT MOTOR WHERE INDICATED ON DRAWING OR REQUIRED BY CODE. DISCONNECT FURNISHED BY M.C. AS PART OF FAN WHEN MOTOR IS ROOF FAN.
3. SINGLE PHASE, 120 VOLT MOTOR.
4. AQUASTAT FURNISHED BY M.C., WIRED BY E.C..
5. 120 VAC MOTORIZED VALVE FURNISHED BY M.C., WIRED BY E.C..

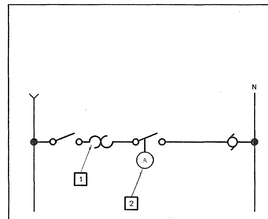

1. MANUAL MOTOR SWITCH AND THERMAL OVERLOAD.
2. AQUASTAT INSTALLED BY P.C., WIRED BY E.C.

WIRING DIAGRAM FOR DOMESTIC WATER CIRC. PUMP
NO SCALE

NOTES FOR SCHEMATIC CONTROL DIAGRAMS:

1. USE MINIMUM #14 AWS CONTROL WIRING.
2. PROVIDE RESET BUTTON IN COVER OF ALL STARTERS.
3. REFER TO MOTOR CONTROL SCHEDULE FOR MOTOR HORSEPOWERS, STARTERS, ETC..
4. ALL CONTROL CIRCUITS TO OPERATE AT 120 VOLTS A.C. UNLESS OTHERWISE NOTED.
5. DO NOT WIRE OVERLOAD CONTACTS OR OTHER SWITCHING DEVICES IN GROUNDED SIDE OF CONTROL CIRCUIT.
6. THESE DIAGRAMS ARE A GUIDE AS TO THE INTENDED MODE OF OPERATION AND REQUIRED INTERLOCKING WIRING. E.C. SHALL REFER TO AND COORDINATE WITH TEMPERATURE CONTROL CONTRACTOR'S SHOP DRAWINGS FOR PRECISE DEVICES AND CONTROL DEVICES.
7. ALL WIRING SHOWN SOLID ON THESE DIAGRAMS ARE BY E.C. UNLESS OTHERWISE NOTED.
8. E.C. TO PROVIDE THE REQUIRED NUMBER OF AUXILIARY CONTACTS IS STARTERS. E.C. TO COORDINATE THE CONTROL TRANSFORMER VA REQUIREMENTS WITH THE TEMPERATURE CONTROL CONTRACTOR AND PROVIDE ADEQUATELY SIZED TRANSFORMERS IN STARTER AS REQUIRED BY STARTER BURDEN AND CONTROL DEVICE BURDENS.
9. THE INDIVIDUAL DIAGRAMS (OTHER THAN D-1) SHOWN ON THIS SHEET ARE APPLICABLE WHEN REFERENCED IN THE "CONTROL DIAGRAM NO." COLUMN IN THE SCHEDULE ABOVE. DIAGRAM D-1 IS APPLICABLE TO ALL MAGNETIC FVNR STARTERS.
10. COORDINATE EXACT LOCATIONS OF MOTORS WITH MECHANICAL DRAWINGS AND M.C. SHOP DRAWINGS.

MOTOR AND EQUIPMENT SCHEDULE

							CONTROL EQUIPMENT									DISCONNECT *						REMARKS
											COMBINATION STARTER											
LINE ITEM #	DESCRIPTION	LOCATION AND OR SERVES	VOLTS/PHASE	HORSEPOWER (APPROX.)	TOTAL KILOWATTS	TOTAL UNIT F.L.A.	MANUAL STARTER WITH OVERLOAD PROTECTION	ACROSS-THE-LINE MAGNETIC STARTER	ACROSS-THE-LINE MAG. COMBI. STARTER	STARTER SIZE (NEMA)	DISCONNECT SWITCH/FUSE/POLES	CIRCUIT BREAKER BREAKER/POLES	VSD	FACTORY WIRED CONTROL PANEL	DUCT SMOKE DETECTOR BY E.C.	SAFETY SWITCH BY E.C. OR M.C.	TOGGLE SWITCH BY E.C.	CONTROL DIAGRAM	PANEL	CIRCUIT NUMBER	WIRE AND CONDUIT SIZE	
	GROUND LEVEL																					
1	ROOF TOP UNIT RTU-1	ROOF	208/3	–	–	26.8	–	–	–	–	–	–	–	–	–	M.C.	–	–	PDP	–	SEE POWER RISER	–
2	ROOF TOP UNIT RTU-2	ROOF	208/3	–	–	27.5	–	–	–	–	–	–	–	–	E.C.	M.C.	–	–	PDP	–	SEE POWER RISER	–
3	ROOF TOP UNIT RTU-3	ROOF	208/3	–	–	166.2	"	"	"	"	"	"	"	"	E.C.	M.C.	–	–	PDP	–	SEE POWER RISER	–
4	ROOF TOP UNIT RTU-4	ROOF	208/3	–	–	59.6	–	–	–	–	–	–	–	–	E.C.	M.C.	–	–	PDP	–	SEE POWER RISER	–
5	ROOF TOP UNIT RTU-5	ROOF	208/3	–	–	20.2	–	–	–	–	–	–	–	–	–	M.C.	–	–	PDP	–	SEE POWER RISER	–
6	ROOF TOP UNIT RTU-6	ROOF	208/3	–	–	26.8	–	–	–	–	–	–	–	–	–	M.C.	–	–	PDP	–	SEE POWER RISER	–
7	ROOF TOP UNIT RTU-7	ROOF	208/3	–	–	21.6	–	–	–	–	–	–	–	–	–	M.C.	–	–	PDP	–	SEE POWER RISER	–
8	ROOF TOP UNIT RTU-8	ROOF	208/3	–	–	21.6	–	–	–	–	–	–	–	–	–	M.C.	–	–	PDP	–	SEE POWER RISER	–
9	EXHAUST FAN EF-1	INFANT TOILETS	120/1	1/8	–	–	–	–	–	–	–	–	–	–	–	–	–	–	–	–	SEE PANEL SCHEDULE	SEE WIRING DIAGRAM ON PLAN SHEET
10	EXHAUST FAN EF-2	LOCKER RMS./TOILET	120/1	1/20	–	–	–	–	–	–	–	–	–	–	–	–	–	–	–	–	SEE PANEL SCHEDULE	–
11	EXHAUST FAN EF-3	WOMENS TOILET RM.	120/1	1/20	–	–	–	–	–	–	–	–	–	–	–	–	–	–	–	–	SEE PANEL SCHEDULE	–
12	EXHAUST FAN EF-4	KITCHEN	120/1	1/20	–	–	"	"	"	"	"	"	"	"	"	"	"	"	"	"	SEE PANEL SCHEDULE	–
13	ELECTRIC HEATER EH-1	VESTIBULE	120/1	–	1.25	–	–	–	–	–	–	–	–	–	–	–	–	–	–	–	SEE PANEL SCHEDULE	–
14	ELECTRIC HEATER EH-2	VESTIBULE	120/1	–	1.25	–	–	–	–	–	–	–	–	–	–	–	–	–	–	–	SEE PANEL SCHEDULE	–
15	WATER HEATER EWH-1	INFANT TOILETS	120/1	–	2.0	16.7	–	–	–	–	–	–	–	–	–	–	E.C.	–	"KP"	45	SEE PANEL SCHEDULE	–
16	WATER HEATER GWH-1	KITCHEN	–	–	–	–	–	–	–	–	–	–	–	–	–	–	–	–	"KP"	–	SEE PANEL SCHEDULE	–
17	RECIRCULATE PUMP RP-1	KITCHEN	–	–	–	–	–	–	–	–	–	–	–	–	–	–	–	–	–	–	SEE PANEL SCHEDULE	–
18	ELEVATOR SUMP PUMP SP-1	ELEV. PIT	–	–	–	–	–	–	–	–	–	–	–	PC	–	–	–	–	–	–	SEE PANEL SCHEDULE	–
19	ELEVATOR	ELEVATOR MACHINE RM.	208/3	–	–	–	–	–	–	–	–	–	–	–	–	–	–	–	–	–	SEE POWER RISER	–
20	BASKET BALL BACKBOARD	–	208/3	–	–	–	–	–	–	–	–	–	–	–	–	–	–	–	–	–	–	–
21	BASKET BALL BACKBOARD	–	208/3	–	–	–	–	–	–	–	–	–	–	–	–	–	–	–	–	–	–	–
22	EXHAUST FAN EF-5	EXIST. JANITOR CLOS.	120/1	–	–	1.14	–	–	–	–	–	–	–	–	–	–	–	–	–	–	–	–
–	–	–	–	–	–	–	–	–	–	–	–	–	–	–	–	–	–	–	–	–	–	–
–	–	–	–	–	–	–	–	–	–	–	–	–	–	–	–	–	–	–	–	–	–	–
–	–	–	–	–	–	–	–	–	–	–	–	–	–	–	–	–	–	–	–	–	–	–
–	–	–	–	–	–	–	–	–	–	–	–	–	–	–	–	–	–	–	–	–	–	–
–	–	–	–	–	–	–	–	–	–	–	–	–	–	–	–	–	–	–	–	–	–	–
–	–	–	–	–	–	–	–	–	–	–	–	–	–	–	–	–	–	–	–	–	–	–
–	–	–	–	–	–	–	–	–	–	–	–	–	–	–	–	–	–	–	–	–	–	–
–	–	–	–	–	–	–	–	–	–	–	–	–	–	–	–	–	–	–	–	–	–	–
–	–	–	–	–	–	–	–	–	–	–	–	–	–	–	–	–	–	–	–	–	–	–

PC = PLUMBING CONTRACTOR
EX = INDICATES EXISTING
EC = ELECTRICAL CONTRACTOR
MC = MECHANICAL CONTRACTOR
TCC = TEMPERATURE CONTROL CONTRACTOR
ELEV = ELEVATOR CONTRACTOR

* NON-FUSED, AMPS AND POLES AS REQUIRED UNLESS OTHERWISE NOTED.

GENERAL NOTES:

1. ALL FUSES SHALL BE BUSSMAN LPN OR LPS OR EQUAL UNLESS OTHERWISE NOTED.
2. ALL FANS SHUT DOWN VIA THE TEMPERATURE CONTROLS UPON FIRE ALARM ACTIVATION. SEE FIRE ALARM RISER SHEET E0.2.

THE SEAL AND SIGNATURE APPLY ONLY TO THE DOCUMENT TO WHICH THEY ARE AFFIXED AND EXPRESSLY DISCLAIM ANY RESPONSIBILITY FOR ALL OTHER PLANS, SPECIFICATIONS, ESTIMATES, REPORTS, OTHER DOCUMENTS OR INSTRUMENTS RELATING TO OR INTENDED TO BE USED FOR ANY PART OR PARTS OF THE ARCHITECTURAL OR ENGINEERING PROJECT.

J:\2001\2001239\dwg\E3.1SHED.dwg

Swim, Schuchat, & Cornett Engineering, Inc.
16207 Edison Avenue Chesterfield, Missouri 63005
(636) 530-7770 Fax# (636) 530-7577

Fletcher:: Architects, Inc.
ARCHITECTURE ■ PLANNING ■ INTERIORS
1906 NORTH SIGNAL HILLS DRIVE
KIRKWOOD, MO. 63122
TEL. (314) 965-6333
FAX. (314) 965-8997
info@fletcher-architects.com

CONSULTANTS

CIVIL ENGINEER:
FRONTENAC ENGR. GROUP, INC.
16 SUNNEN DR.
ST. LOUIS, MO 63143
PHONE (314) 644-2200
FAX (314) 644-0645

STRUCT. ENGINEER:
ABS CONSULTING
1844 LACKLAND HILLS PARKWAY
ST. LOUIS, MO 63146
PHONE (314) 994-7007
FAX (314) 994-0722

M.E.P. ENGINEER:
SSC ENGINEERING
550 SPIRIT OF ST. LOUIS BLVD.
CHESTERFIELD, MO 63005
PHONE (636) 530-7770
FAX (636) 530-7877

HARDWARE CONSULTANT
8710
5555 PIERRE CT.
ST. LOUIS, MO 63128
PHONE (314) 487-7776
FAX (314) 842-2242

KITCHEN CONSULTANTS
THE GEIGER GROUP
3501 WATSON ROAD
ST. LOUIS, MO 63139
PHONE (314) 645-2987
FAX (314) 645-3208

LANDSCAPE ARCHITECT
AUSTIN TAO, AND ASSOC.
2101 LOCUST, 2ND. FLOOR
ST. LOUIS, MO 63103
PHONE (314) 436-3999
FAX (314) 436-9130

INTERIOR DESIGN
OTOOLE DESIGN ASSOC.
124 WEST JEFFERSON
KIRKWOOD, MO 63122
PHONE (314) 909-1905
FAX (314) 909-1906

PROJECT:
ADDITION AND RENOVATIONS TO
McKnight Road
Church of Christ
2515 SOUTH MCKNIGHT ROAD
ST. LOUIS, MO 63124

THE SEAL AND SIGNATURES APPLY ONLY TO THE DOCUMENT TO WHICH THEY ARE AFFIXED, AND WE EXPRESSLY DISCLAIM ANY RESPONSIBILITY FOR ALL OTHER PLANS, SPECIFICATIONS, ESTIMATES, REPORTS, OTHER DOCUMENTS OR INSTRUMENTS RELATING TO OR INTENDED TO BE USED FOR ANY PART OR PARTS OF THE PROJECT.

COPYRIGHT 2002 FLETCHER ARCHITECTS, INC.

NO	DATE	REVISIONS
	02/09/01	ADDENDUM #0

PROJECT NO. 2001239
DRAWN BY: JWW
CHECKED BY: EG
DATE: NOVEMBER 1, 2002

SHEET NO. **E3.1**

CONSTRUCTION/BID DRAWINGS

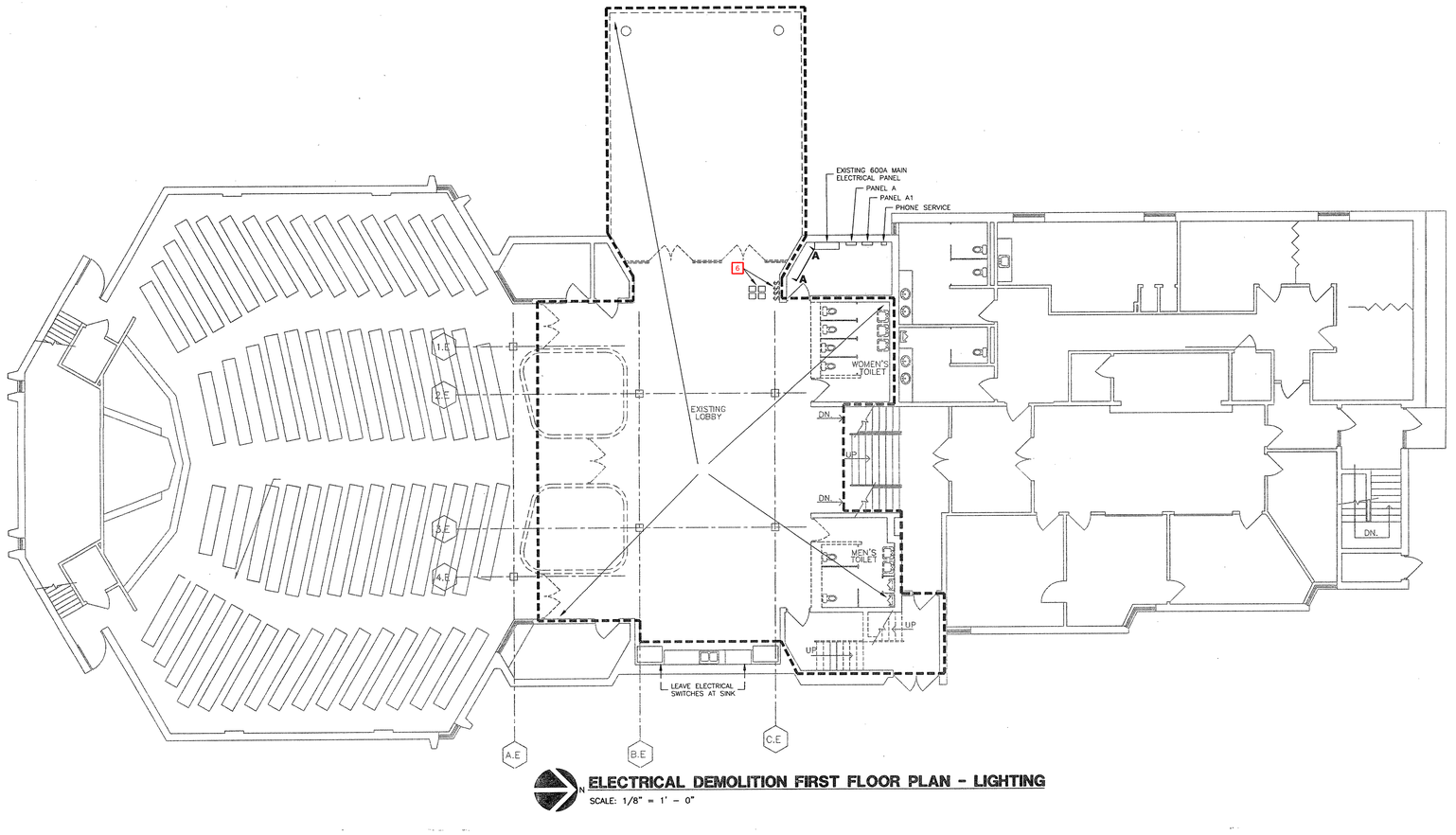

N

ELECTRICAL DEMOLITION FIRST FLOOR PLAN - LIGHTING

SCALE: 1/8" = 1' - 0"

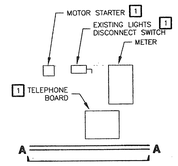

ELECTRICAL ROOM SECTION

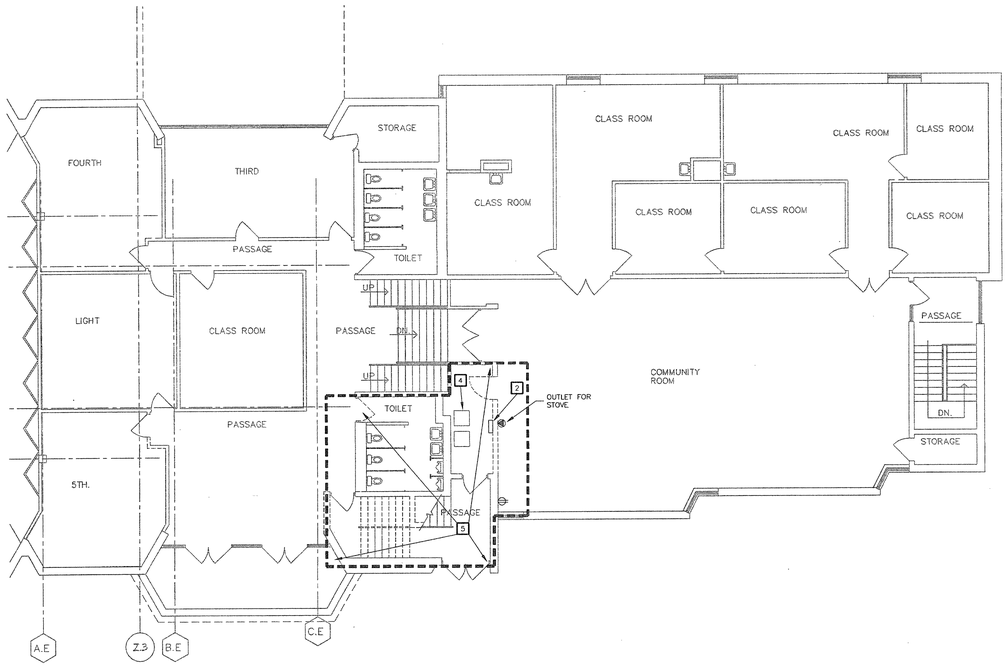

N

ELECTRICAL DEMOLITION SECOND FLOOR PLAN - LIGHTING

SCALE: 1/8" = 1' - 0"

GENERAL DEMOLITION NOTES

1. THE OWNER INTENDS TO VACATE AREA OF WORK BEFORE DEMOLITION BEGINS. UTILITIES AND SERVICES TO ANY OTHER EXISTING FACILITIES SHALL NOT BE INTERRUPTED WITHOUT THE OWNERS APPROVAL AS TO THE TIME AND DURATION. THE OWNER WILL CONTINUE TO OCCUPY THE REST OF THE EXISTING FACILITIES THROUGHOUT THE CONSTRUCTION OPERATIONS AND THE ELECTRICAL CONTRACTOR SHALL SO ORGANIZE HIS WORK AS TO CAUSE A MINIMUM OF INTERRUPTIONS SHALL BE SCHEDULED AT THE CONVENIENCE OF THE OWNER.
2. ALL LIGHT FIXTURES, 120 VOLT RECEPTACLES, SPECIAL RECEPTACLES, SWITCHES, ETC. ALONG WITH ALL CONDUIT AND WIRE SHALL BE REMOVED BY THE ELECTRICAL CONTRACTOR. IT SHALL BE THE RESPONSIBILITY OF THE ELECTRICAL CONTRACTOR TO VISIBLY EXAMINE ALL EXISTING WALLS AND CEILINGS DESIGNATED FOR REMOVAL TO DETERMINE THE CONDUIT AND WIRING THAT WILL REQUIRE REMOVAL.
3. THE ELECTRICAL CONTRACTOR SHALL REMOVE EQUIPMENT, OUTLETS, CONDUIT, WIRE, ETC., AS SHOWN AND SPECIFIED ON DRAWINGS AND AS MAY BECOME NECESSARY BECAUSE OF EXISTING FIELD CONDITIONS. IT SHALL BE THE RESPONSIBILITY OF THE ELECTRICAL CONTRACTOR TO VISIBLY EXAMINE ALL EXISTING WALLS AND CEILINGS DESIGNATED FOR REMOVAL TO DETERMINE THE CONDUIT AND THE WIRING THAT WILL REQUIRE REMOVAL.
4. ALL LIGHTING FIXTURES, SWITCHES RECEPTACLES, SPECIAL OUTLETS, ETC., WHICH ARE SHOWN WITH DASHED LINE SYMBOLS ON THE DEMOLITION PLANS OR SO NOTED SHALL BE REMOVED BY THE ELECTRICAL CONTRACTOR ALONG WITH ALL ASSOCIATED WIRING AND CONDUIT, UNLESS OTHERWISE NOTED. ALL DEVICES SHOWN WITH SOLID LINES SHALL REMAIN.
5. MAINTAIN CIRCUIT CONTINUITY TO ALL EXISTING FIXTURES, EQUIPMENT, OUTLETS, ETC. TO REMAIN IN USE WHETHER NOTED ON THE PLANS OR NOT. FIELD VERIFY EXISTING ITEMS TO REMAIN IN USE.
6. WIRING FOR EXISTING CIRCUITS WHICH ARE PARTIALLY ABANDONED SHALL BE RECONNECTED BY THE ELECTRICAL CONTRACTOR TO SERVICE THE REMAINING OUTLETS ON THE CIRCUIT.
7. ALL WIRING FOR A CIRCUIT WHICH IS TO BE REMOVED SHALL BE REMOVED BY THE ELECTRICAL CONTRACTOR BACK TO THE PANEL WHICH SUPPLIED THE CIRCUIT.
8. ALL EMPTY CONDUIT (MADE EMPTY BY THIS DEMOLITION) SHALL BE REMOVED BY THE ELECTRICAL CONTRACTOR.
9. ALL UNUSED TELEPHONE AND DATA CABLES SHALL BE REMOVED BY THE ELECTRICAL CONTRACTOR ALL OTHER UNUSED CABLES SHALL ALSO BE REMOVED BY THE ELECTRICAL CONTRACTOR.
10. ALL ACTIVE CIRCUITING THAT RUNS THROUGH THIS SPACE, ORIGINATING AND/OR TERMINATING IN OTHER SPACES, SHALL REMAIN IN PLACE.
11. WHERE FIXTURES EQUIPMENT OR DEVICES ARE REMOVED, PATCH AND FINISH THE SURFACE AS REQUIRED, TO MATCH THE EXISTING.
12. MISCELLANEOUS CABLES, CONDUITS, WIRING DEVICES, ETC., TO BE REMOVED SHALL BECOME THE PROPERTY OF THE CONTRACTOR AND HE SHALL REMOVE THESE ITEMS FROM THE PREMISES.
13. ALL EXISTING ELECTRICAL EQUIPMENT, ETC., TO BE REMOVED SHALL REMAIN THE PROPERTY OF THE CONTRACTOR, UNLESS OTHERWISE NOTED. THE CONTRACTOR SHALL REMOVE THESE ITEMS FROM THE PREMISES.
14. FOR ALL EXISTING ELECTRICAL DEVICES IN WALLS TO BE REMOVED, ELECTRICAL CONTRACTOR SHALL DISCONNECT POWER, REMOVE CONDUCTORS AND CAP CONDUIT IN FLOOR OR CEILING AS REQUIRED. DEVICES ARE TO BE REMOVED ALONG WITH WALL BY GENERAL CONTRACTOR.
15. FOR ALL EXISTING ELECTRICAL DEVICES TO BE REMOVED FROM WALLS WHICH REMAIN, ELECTRICAL CONTRACTOR SHALL DISCONNECT POWER, REMOVE CONDUCTORS, REMOVE DEVICE AND PROVIDE BLANK COVER PLATE OR AS NOTED.
16. EXISTING RECEPTACLES WHICH ARE TO REMAIN SHALL BE EXTENDED TO BE FLUSH WITH NEW FINISH ON EXISTING WALL WHERE REQUIRED.
17. WHERE CONDUITS EXTENDING OUT OF THE FLOOR ARE TO BE REMOVED, CUT THE CONDUIT OFF 1/2" BELOW THE FLOOR LINE AND PATCH.
18. FIELD VERIFY DEMOLITION AREAS INDICATED ON THE DRAWINGS AND DISCONNECT AND REMOVE ELECTRICAL ITEMS IN THESE AREAS AS REQUIRED.
19. WHERE ELECTRICAL EQUIPMENT HAS BEEN DEMO'ED PATCH WALL AND MAKE READY FOR NEW WALL FINISH.
20. ALL DEMOLITION ELECTRICAL ITEMS SHALL BE TURNED OVER TO OWNER OR IF NOT WANTED FOR REUSE, ITEMS SHALL BE DISPOSED OF BY THE ELECTRICAL CONTRACTOR.

ELECTRICAL DEMOLITION KEYED NOTES:

1. EXISTING DEVICE TO BE RELOCATED TO NEW WALL ERECTED IN PLACE OF THE EXISTING DOOR.
2. EXISTING METER TO BE DISCONNECTED AND REMOVED AFTER NEW SERVICE IS INSTALLED.
3. EXISTING PANEL TO BE RELOCATED. SEE REMODEL PLAN AND ONE-LINE DIAGRAM.
4. EXISTING FURNACE TO BE DISCONNECTED FOR REMOVAL BY OTHERS.
5. GENERAL AREA OF DEMOLITION. REMOVE ALL ELECTRICAL DEVICES UNLESS SHOWN OR NOTED OTHERWISE.
6. EXISTING LIGHTING SWITCHES TO BE REMOVED. THE EXISTING PARKING LOT LIGHTING CONTROLS SHALL BE RELOCATED INTO NEW ELECTRICAL ROOM.

Fletcher:: Architects, Inc.

ARCHITECTURE ■ PLANNING ■ INTERIORS
1906 NORTH SIGNAL HILLS DRIVE
KIRKWOOD, MO. 63122
TEL. (314) 965-6333
FAX. (314) 965-8997
info@fletcher-architects.com

CONSULTANTS

CIVIL ENGINEER:
FRONTENAC ENGR. GROUP, INC.
16 SUNNEN DR.
ST. LOUIS, MO 63143
PHONE (314) 644-2200
FAX (314) 644-0645

STRUCT. ENGINEER:
ABS CONSULTING
1844 LACKLAND HILLS PARKWAY
ST. LOUIS, MO 63146
PHONE (314) 994-7007
FAX (314) 994-0722

M.E.P. ENGINEER:
SSC ENGINEERING
550 SPIRIT OF ST. LOUIS BLVD.
CHESTERFIELD, MO 63005
PHONE (636) 530-7770
FAX (636) 530-7877

HARDWARE CONSULTANT
8710
5535 PIERRE CT.
ST. LOUIS, MO 63128
PHONE (314) 487-7776
FAX (314) 842-2242

KITCHEN CONSULTANTS
THE GEIGER GROUP
3501 WATSON ROAD
ST. LOUIS, MO 63139
PHONE (314) 645-2987
FAX (314) 645-3208

LANDSCAPE ARCHITECT
AUSTIN TAO AND ASSOC.
2101 LOCUST, 2ND. FLOOR
ST. LOUIS, MO 63103
PHONE (314) 436-3999
FAX (314) 436-9130

INTERIOR DESIGN
DYDOLE DESIGN ASSOC
124 WEST JEFFERSON
KIRKWOOD, MO 63122
PHONE (314) 909-1905
FAX (314) 909-1906

PROJECT:
ADDITION AND RENOVATIONS TO
McKnight Road Church of Christ
2515 SOUTH MCKNIGHT ROAD
ST. LOUIS, MO 63124

THE SEAL AND SIGNATURES APPLY ONLY TO THE DOCUMENT TO WHICH THEY ARE ATTACHED, AND WE EXPRESSLY DISCLAIM ANY RESPONSIBILITY FOR ALL OTHER PLANS, SPECIFICATIONS, ESTIMATES, REPORTS, OR OTHER DOCUMENTS OR INSTRUMENTS RELATING TO OR INTENDED TO BE USED FOR ANY PART OR PARTS OF THE PROJECT.

COPYRIGHT 2002 FLETCHER ARCHITECTS, INC.

NO	DATE	REVISIONS
	00/00/01	ADDENDUM #0

PROJECT NO. 2001239
DRAWN BY: JW
CHECKED BY: CF
DATE: NOVEMBER 1, 2002

SHEET NO. **ED1.1**

CONSTRUCTION/BID DRAWINGS

SSC Swim, Schuchat, & Cornett Engineering, Inc.
16207 Edison Avenue (636) 530-7770
Chesterfield, Missouri 63005 Fax# (636) 530-7877

THE SEAL AND SIGNATURE APPLY ONLY TO THE DOCUMENT TO WHICH THEY ARE ATTACHED, AND WE EXPRESSLY DISCLAIM ANY RESPONSIBILITY FOR ALL OTHER PLANS, SPECIFICATIONS, ESTIMATES, REPORTS, OR INSTRUMENTS RELATING TO OR INTENDED TO BE USED FOR ANY PART OR PARTS OF THE ARCHITECTURAL OR ENGINEERING PROJECT.

J:\2001239\Revit\2001239_ED1.1.dwg

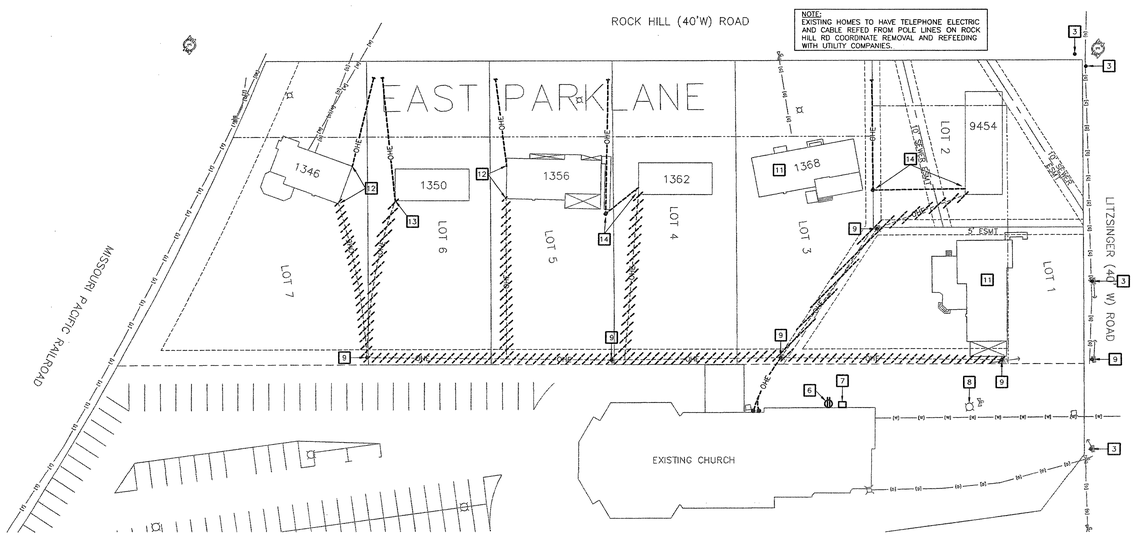

EXISTING SITE DEMOLITION PLAN

1" = 40'-0"

ELECTRICAL KEYED NOTES:

1. NEW PAD MOUNTED TRANSFORMER BY AMEREN U.E. PAD IS PROVIDED BY UTILITY COMPANY AND PLACED BY E.C. PER UTILITY COMPANY REQUIREMENTS.
2. 4" PVC CONDUIT BY E.C. FOR PRIMARY CABLE. INSTALL PER UTILITY COMPANY REQUIREMENTS.
3. EXISTING UTILITY POLE TO REMAIN.
4. COORDINATE WITH UTILITY COMPANY FOR PRIMARY CONDUIT INSTALLATION AT POLE. COORDINATE THE EXACT POLE LOCATION WITH UTILITY.
5. SECONDARY CONDUIT TO MAIN DISTRIBUTION PANEL. SEE ONE LINE DIAGRAM.
6. EXISTING EXTERIOR RECEPTACLE TO BE REMOVED.
7. EXISTING CONDUIT AND ELBOW. VERIFY THIS IS TO THE EXISTING PARKING LOT LIGHT AND REMOVE.
8. EXISTING PARKING LOT LIGHT TO BE REMOVED BY E.C.
9. EXISTING UTILITY POLE TO BE REMOVED BY U.E. COORDINATE REMOVAL WITH UTILITY COMPANY.
10. NEW UTILITY RISER POLE.
11. EXISTING HOME TO BE DEMOLISHED.
12. EC SHALL RELOCATE EXISTING SERVICE WEATHERHEAD CONNECTION FOR CHURCH OWNED PROPERTY TO ALLOW NEW SERVICE DROP FROM WEST OF PROPERTY.
13. EXISTING PROPERTY TO BE REFERRED BY AMEREN TO EXISTING SERVICE WEATHERHEAD.
14. NEW POLE LINE EASEMENT ON CHURCH PROPERTY WILL ALLOW U.E. TO REFEED EXISTING PROPERTY AT THE EXISTING WEATHERHEAD.

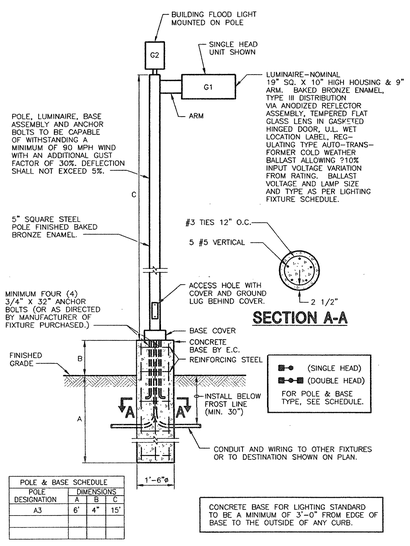

POLE & BASE SCHEDULE			
POLE DESIGNATION	DIMENSIONS A	B	C
A3	6'	4"	15"

LIGHT STANDARD DETAIL

NO SCALE

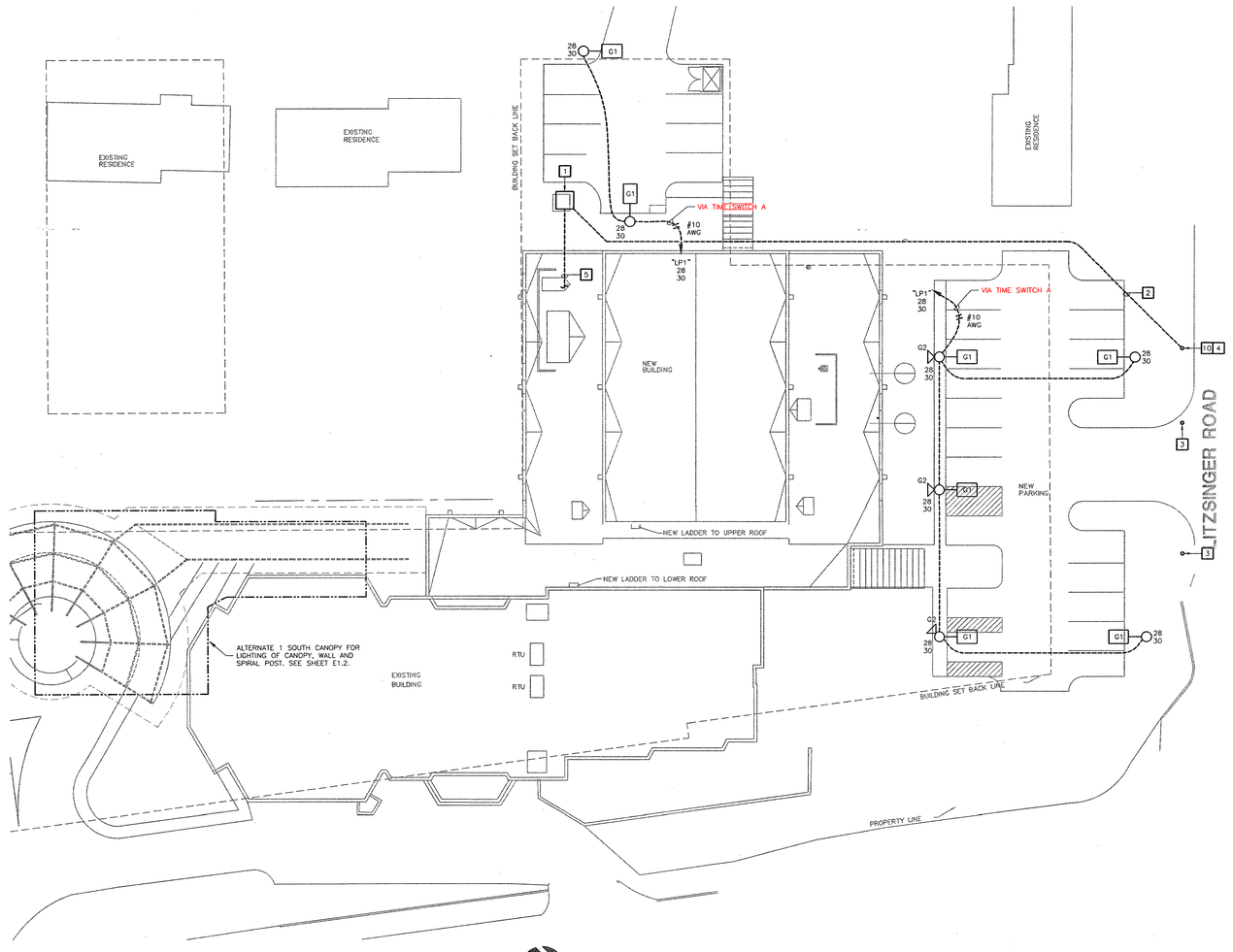

ELECTRICAL SITE PLAN

1" = 20'-0"

THE SEAL AND SIGNATURE APPLY ONLY TO THE DOCUMENT TO WHICH THEY ARE AFFIXED, AND FLETCHER ARCHITECTS, INC. DISCLAIMS ANY RESPONSIBILITY FOR ALL OTHER PLANS, SPECIFICATIONS, ESTIMATES, REPORTS, OR OTHER DOCUMENTS OR INSTRUMENTS RELATING TO OR INTENDED TO BE USED FOR ANY PART OR PARTS OF THE PROJECT.

2001039#elec10901_1.dwg

SSC Swim, Schuchat, & Cornett Engineering, Inc.
18207 Edison Avenue (636) 530-7770
Chesterfield, Missouri 63005 Fax# (636) 530-7877

Fletcher:: Architects, Inc.
ARCHITECTURE ■ PLANNING ■ INTERIORS
1906 NORTH SIGNAL HILLS DRIVE
KIRKWOOD, MO. 63122
TEL. (314) 965-4333
FAX. (314) 965-8997
info@fletcher-architects.com

CONSULTANTS

CIVIL ENGINEER:
FRONTENAC ENGR. GROUP, INC.
16 SUNNEN DR.
ST. LOUIS, MO 63143
PHONE (314) 644-2200
FAX (314) 644-0645

STRUCT. ENGINEER:
ABS CONSULTING
1844 LACKLAND HILLS PARKWAY
ST. LOUIS, MO 63146
PHONE (314) 994-7007
FAX (314) 994-0722

M.E.P. ENGINEER:
SSC ENGINEERING
550 SPIRIT OF ST. LOUIS BLVD.
CHESTERFIELD, MO 63005
PHONE (636) 530-7770
FAX (636) 530-7877

HARDWARE CONSULTANT
8710
5555 PIERRE CT.
ST. LOUIS, MO 63128
PHONE (314) 487-7776
FAX (314) 842-2242

KITCHEN CONSULTANTS
THE GEIGER GROUP
3501 WATSON ROAD
ST. LOUIS, MO 63139
PHONE (314) 645-2987
FAX (314) 645-3208

LANDSCAPE ARCHITECT
AUSTIN TAO AND ASSOC.
2101 LOCUST, 2ND. FLOOR
ST. LOUIS, MO 63103
PHONE (314) 436-3999
FAX (314) 436-9130

INTERIOR DESIGN
O'TOOLE DESIGN ASSOC.
124 WEST JEFFERSON
KIRKWOOD, MO 63122
PHONE (314) 909-1905
FAX (314) 909-1906

PROJECT:
ADDITION AND RENOVATIONS TO
McKnight Road
Church of Christ
2515 SOUTH MCKNIGHT ROAD
ST. LOUIS, MO 63124

THE SEAL AND SIGNATURES APPLY ONLY TO THE DOCUMENT TO WHICH THEY ARE AFFIXED, AND FLETCHER ARCHITECTS, INC. DISCLAIMS ANY RESPONSIBILITY FOR ALL OTHER PLANS, SPECIFICATIONS, ESTIMATES, REPORTS, OR OTHER DOCUMENTS OR INSTRUMENTS RELATING TO OR INTENDED TO BE USED FOR ANY PART OR PARTS OF THE PROJECT.

COPYRIGHT 2002 FLETCHER ARCHITECTS, INC.

NO	DATE	REVISIONS
	00/00/01	ADDENDUM #0

PROJECT NO. 2001239
SHEET NO. E0.1
DRAWN BY: JW
CHECKED BY: CF
DATE: NOVEMBER 1, 2002

CONSTRUCTION/BID DRAWINGS

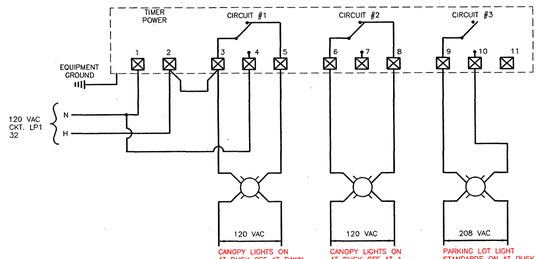

TIME SWITCH A WIRING DIAGRAM

N.T.S.

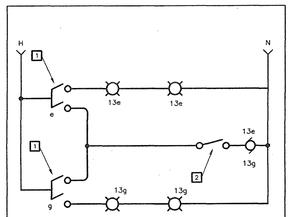

WIRING DIAGRAM FOR RESTROOMS 117 & 119 LIGHTS & EXH FAN
NO SCALE

GENERAL NOTES:

1. FOR EXACT LOCATION OF LIGHTING FIXTURES. SEE REFLECTED CEILING PLAN.

ELECTRICAL KEYED NOTES:

1. PROVIDE WITH EMERGENCY BATTERY BACK-UP.
2. PROVIDE -5' STARTING BALLAST IN CANOPY LIGHTS.
3. PROVIDE 3 LEVEL LIGHTING CONTROL FOR GYMNASIUM. EACH FIXTURE TO BE CONNECTED TO 3 SWITCH LEGS. SWITCHES 'a' & 'd' SHALL BE 1P., 20AMP. DIMMERS. LUTRON NTF-10-W.
4. PROVIDE STAGGER STRIP FLUORESCENT FIXTURE IN LENGTHS AS REQUIRED TO EVENLY LAMINATE THE COVE. VERIFY COVE DIMENSIONS DURING CONSTRUCTION.
5. POWER EXHAUST FAN EF-2 FROM TOILET ROOMS SWITCHED LIGHTING CIRCUIT. SEE WIRING DIAGRAM THIS SHEET.
6. POWER EXHAUST FAN EF-3 FROM TOILET ROOMS SWITCHED LIGHTING CIRCUIT.
7. 3-WAY 20AMP. DIMMER.
8. LIGHT FIXTURE ON WITH PHOTO-CELL AND OFF WITH PHOTO-CELL.
9. LIGHT FIXTURE ON WITH PHOTO-CELL AND OFF WITH TIME SWITCH.
10. RECONNECT EXISTING MEN'S TOILET EXHAUST FAN TO MEN'S NEW SWITCHED LIGHTING CIRCUIT.
11. RECONNECT EXISTING WOMEN'S TOILET EXHAUST FAN TO ELEVATOR EQUIPMENT LIGHT FIXTURE CIRCUIT "LP1" 14.
12. POWER EXHAUST FAN EF-1 FROM TOILET ROOM'S SWITCHED LIGHTING CIRCUIT.

ELECTRICAL FIRST FLOOR PLAN - LIGHTING

SCALE: 1/8" = 1' - 0"

THE SEAL AND SIGNATURE APPLY ONLY TO THE DOCUMENT TO WHICH THEY ARE AFFIXED, AND WE EXPRESSLY DISCLAIM ANY RESPONSIBILITY FOR ALL OTHER PLANS, SPECIFICATIONS, ESTIMATES, REPORTS, OR OTHER DOCUMENTS OR INSTRUMENTS RELATING TO OR INTENDED TO BE USED FOR ANY PART OR PARTS OF THE ARCHITECTURAL OR ENGINEERING PROJECT.

J:\2001239\acad\239E1.1.dwg

Fletcher:: Architects, Inc.
ARCHITECTURE ■ PLANNING ■ INTERIORS
1906 NORTH SIGNAL HILLS DRIVE
KIRKWOOD, MO. 63122
TEL. (314) 965-6333
FAX. (314) 965-8997
info@fletcher-architects.com

CONSULTANTS

CIVIL ENGINEER:
FRONTENAC ENGR. GROUP, INC.
16 SUNNEN DR.
ST. LOUIS, MO 63143
PHONE (314) 644-2200
FAX (314) 644-0645

STRUCT. ENGINEER:
ABS CONSULTING
1844 LADKLAND HILLS PARKWAY
ST. LOUIS, MO 63146
PHONE (314) 994-7007
FAX (314) 994-0722

M.E.P. ENGINEER:
SSC ENGINEERING
550 SPIRIT OF ST. LOUIS BLVD.
CHESTERFIELD, MO 63005
PHONE (636) 530-7770
FAX (636) 530-7877

HARDWARE CONSULTANT
8710
5555 PIERRE CT.
ST. LOUIS, MO 63128
PHONE (314) 487-7776
FAX (314) 842-2243

KITCHEN CONSULTANTS
THE GEIGER GROUP
3501 WATSON ROAD
ST. LOUIS, MO 63139
PHONE (314) 645-2987
FAX (314) 645-3208

LANDSCAPE ARCHITECT
AUSTIN TAO. AND ASSOC.
2101 LOCUST, 2ND. FLOOR
ST. LOUIS, MO 63103
PHONE (314) 436-3999
FAX (314) 436-9130

INTERIOR DESIGN
OTOOLE DESIGN ASSOC.
124 WEST JEFFERSON
KIRKWOOD, MO 63122
PHONE (314) 909-1905
FAX (314) 909-1906

PROJECT:
ADDITION AND RENOVATIONS TO
McKnight Road
Church of Christ
2515 SOUTH MCKNIGHT ROAD
ST. LOUIS, MO 63124

THE SEAL AND SIGNATURES APPLY ONLY TO THE DOCUMENT TO WHICH THEY ARE AFFIXED, AND WE EXPRESSLY DISCLAIM ANY RESPONSIBILITY FOR ALL OTHER PLANS, SPECIFICATIONS, ESTIMATES, REPORTS, OR OTHER DOCUMENTS OR INSTRUMENTS RELATING TO OR INTENDED TO BE USED FOR ANY PART OR PARTS OF THE PROJECT.

COPYRIGHT 2002 FLETCHER ARCHITECTS, INC.

NO	DATE	REVISIONS
	02/20/01	ADDENDUM #0

PROJECT NO. 2001239
DRAWN BY: JW/MEG
CHECKED BY: CF
DATE: NOVEMBER 1, 2002

SHEET NO. **E1.1**

CONSTRUCTION/BID DRAWINGS

SSC Swim, Schuchat, & Cornett Engineering, Inc.
18207 Edison Avenue Chesterfield, Missouri 63005
(636) 530-7770 Fax# (636) 530-7877

ELECTRICAL KEYED NOTES:

1. LIGHT FIXTURE ON WITH PHOTO-CELL AND OFF WITH PHOTO-CELL.
2. LIGHT FIXTURE ON WITH PHOTO-CELL AND OFF WITH TIME SWITCH.
3. TYPE "FF" LIGHTS MOUNTED ON SPIRAL FOR LIGHTING OF LETTERS ON 180° WALL. MOUNT 10'-0" ABOVE PAVEMENT.
4. TYPE "GG" LIGHTS MOUNTED ON SPIRAL FOR LIGHTING OF SPIRAL MOUNT 12'-0" ABOVE PAVEMENT.

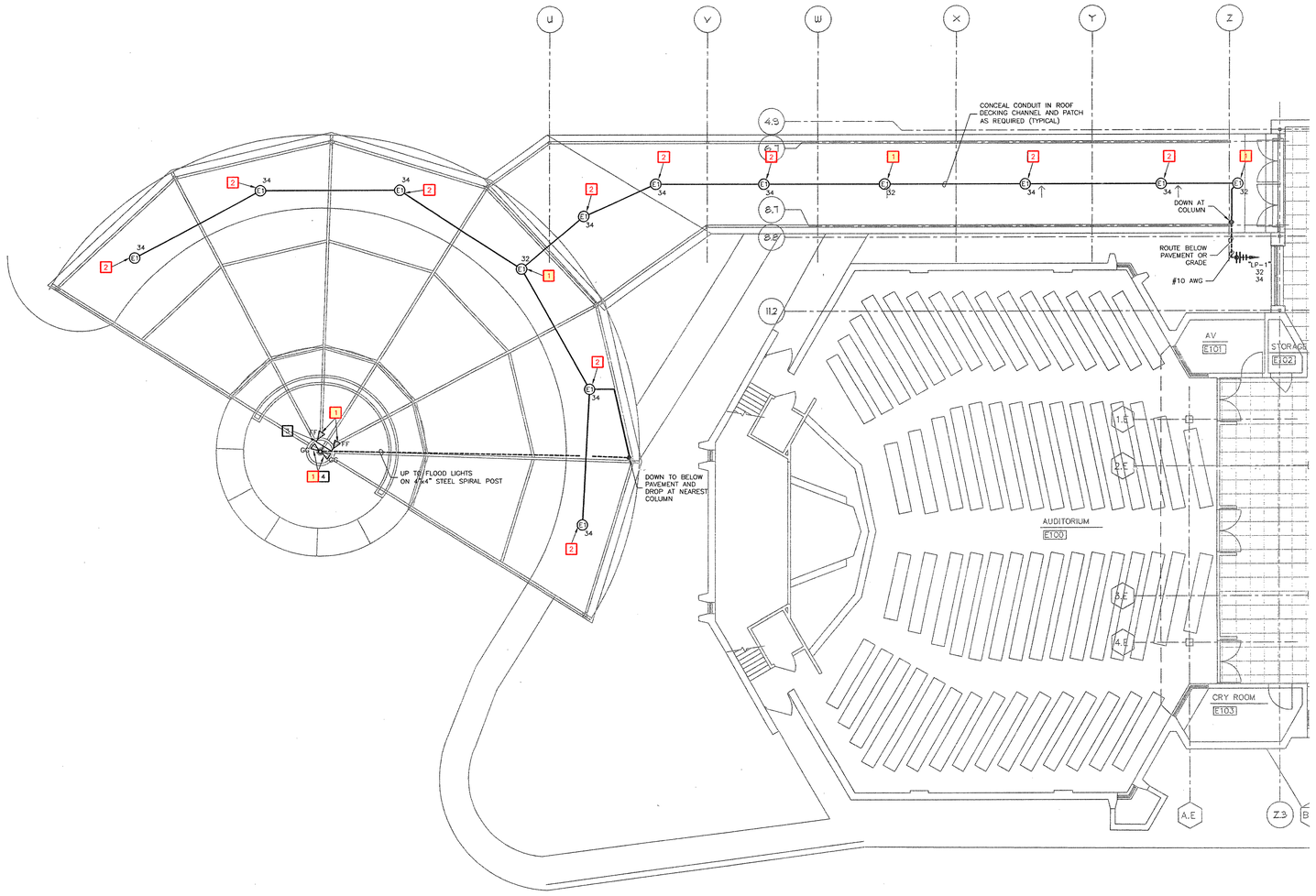

CANOPY PLAN - LIGHTING ALTERNATE #1

SCALE: 1/8" = 1' - 0"

THE SEAL AND SIGNATURES APPLY ONLY TO THE DOCUMENT TO WHICH THEY ARE AFFIXED, AND RE EXPRESSLY DISCLAIM ANY RESPONSIBILITY FOR ALL OTHER ALTERED COPIES OF DRAWINGS AND ESTIMATES, REPORTS, OR OTHER DOCUMENTS OR INSTRUMENTS RELATING TO OR INTENDED TO BE USED FOR ANY PART OR PARTS OF THE ARCHITECTURAL OR ENGINEERING PROJECT.

J:\2001\01\dwg\e1\01.E1.2.dwg

Fletcher::
Architects, Inc.

ARCHITECTURE ■ PLANNING ■ INTERIORS
1906 NORTH SIGNAL HILLS DRIVE
KIRKWOOD, MO. 63122
TEL. (314) 965-6333
FAX. (314) 965-8997
info@fletcher-architects.com

CONSULTANTS

CIVIL ENGINEER:
FRONTENAC ENGR. GROUP, INC.
16 SUNNEN DR.
ST. LOUIS, MO 63143
PHONE (314) 644-2200
FAX (314) 644-0645

STRUCT. ENGINEER:
ABS CONSULTING
1844 LACKLAND HILLS PARKWAY
ST. LOUIS, MO 63146
PHONE (314) 994-7007
FAX (314) 994-0722

M.E.P. ENGINEER:
SSC ENGINEERING
550 SPIRIT OF ST. LOUIS BLVD.
CHESTERFIELD, MO 63005
PHONE (636) 530-7770
FAX (636) 530-7877

HARDWARE CONSULTANT
8710
5555 PIERRE CT.
ST. LOUIS, MO 63128
PHONE (314) 487-7776
FAX (314) 842-2242

KITCHEN CONSULTANTS
THE GEIGER GROUP
3501 WATSON ROAD
ST. LOUIS, MO 63139
PHONE (314) 645-2987
FAX (314) 645-3208

LANDSCAPE ARCHITECT
AUSTIN TAO, AND ASSOC.
2101 LOCUST, 2ND. FLOOR
ST. LOUIS, MO 63103
PHONE (314) 436-3899
FAX (314) 436-9130

INTERIOR DESIGN
OTOOLE DESIGN ASSOC.
124 WEST JEFFERSON
KIRKWOOD, MO 63122
PHONE (314) 909-1905
FAX (314) 909-1906

PROJECT:
ADDITION AND RENOVATIONS TO
McKnight Road
Church of Christ
2515 SOUTH MCKNIGHT ROAD
ST. LOUIS, MO 63124

THE SEAL AND SIGNATURES APPLY ONLY TO THE DOCUMENT TO WHICH THEY ARE AFFIXED, AND RE EXPRESSLY DISCLAIM ANY RESPONSIBILITY FOR ALL OTHER ALTERED COPIES OF DRAWINGS AND ESTIMATES, REPORTS, OR OTHER DOCUMENTS OR INSTRUMENTS RELATING TO OR INTENDED TO BE USED FOR ANY PART OR PARTS OF THE PROJECT.

COPYRIGHT 2002 FLETCHER ARCHITECTS, INC.

NO	DATE	REVISIONS
	00/00/01	ADDENDUM #0

PROJECT NO. 2001239
DRAWN BY: JWW
CHECKED BY: BG
DATE: NOVEMBER 1, 2002

SHEET NO. E1.2

CONSTRUCTION/BID DRAWINGS

SSC Swim, Schuchat, & Cornett Engineering, Inc.
18207 Edison Avenue Chesterfield, Missouri 63005
(636) 530-7770 Fax# (636) 530-7877

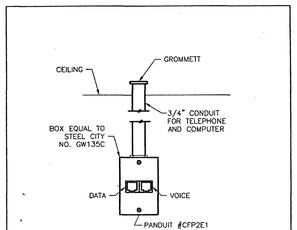

TYPICAL OUTLET BOX AT OFFICE DESKS
NO SCALE

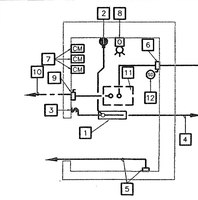

WIRING DIAGRAM A

ELEVATOR MACHINE ROOM KEYED NOTES:

1. LIGHT FIXTURE IN ELEVATOR MACHINE ROOM, DAY-BRITE AW-N-2-32-120-1/2.
2. 120V. GFI DUPLEX RECEPTACLE FOR MAINTENANCE.
3. 1 POLE 20A. SWITCH CONTROLLING LIGHT FIXTURE.
4. LIGHT FIXTURE AND MAINTENANCE RECEPTACLE ON DEDICATED 120V. 1 POLE 20A. CIRCUIT BREAKER.
5. CONDUIT AND BOX FOR TELEPHONE IN ELEVATOR CAR.
6. 120V. DEDICATED CIRCUIT AND 2 POLE 30/20A. FUSIBLE DISCONNECT (USE ONLY 1 POLE) OR 1 POLE 20A. CIRCUIT BREAKER FOR ELEVATOR CAR LIGHT. STUB UP AT ELEVATOR CONTROLLER AND CONNECT TO TERMINALS.
7. FIRE ALARM CONTROL MODULES. SEE WIRING DIAGRAM A.
8. OIL SENSOR AUDIO VISUAL DEVICE BY P.C.
9. DISCONNECT SWITCH. SEE ONE LINE DIAGRAM. PROVIDE SINGLE POLE-IT. SEPERATE DRY AND ISOLATED CONTACT IN ELEVATOR DISCONNECT TO DISABLE EMERGENCY BATTERY RETURN FUNCTION. PROVIDE WIRING AS REQUIRED BY ELEVATOR CONTRACTOR.
10. FEEDER TO PANELBOARD OR SWITCHBOARD. SEE ONE LINE DIAGRAM.
11. ELEVATOR CONTROLLER – STUB UP AND CONNECT TO POWER LUGS.
12. FIRE ALARM SMOKE DETECTOR FOR ELEVATOR RECALL AND ELEVATOR FIREFIGHTERS WARNING LIGHT. PROVIDE WIRING FROM FACP TO ELEVATOR CONTROLLER AS REQUIRED. SEE WIRING DIAGRAM A.

TYPICAL ELEVATOR MACHINE ROOM
NO SCALE

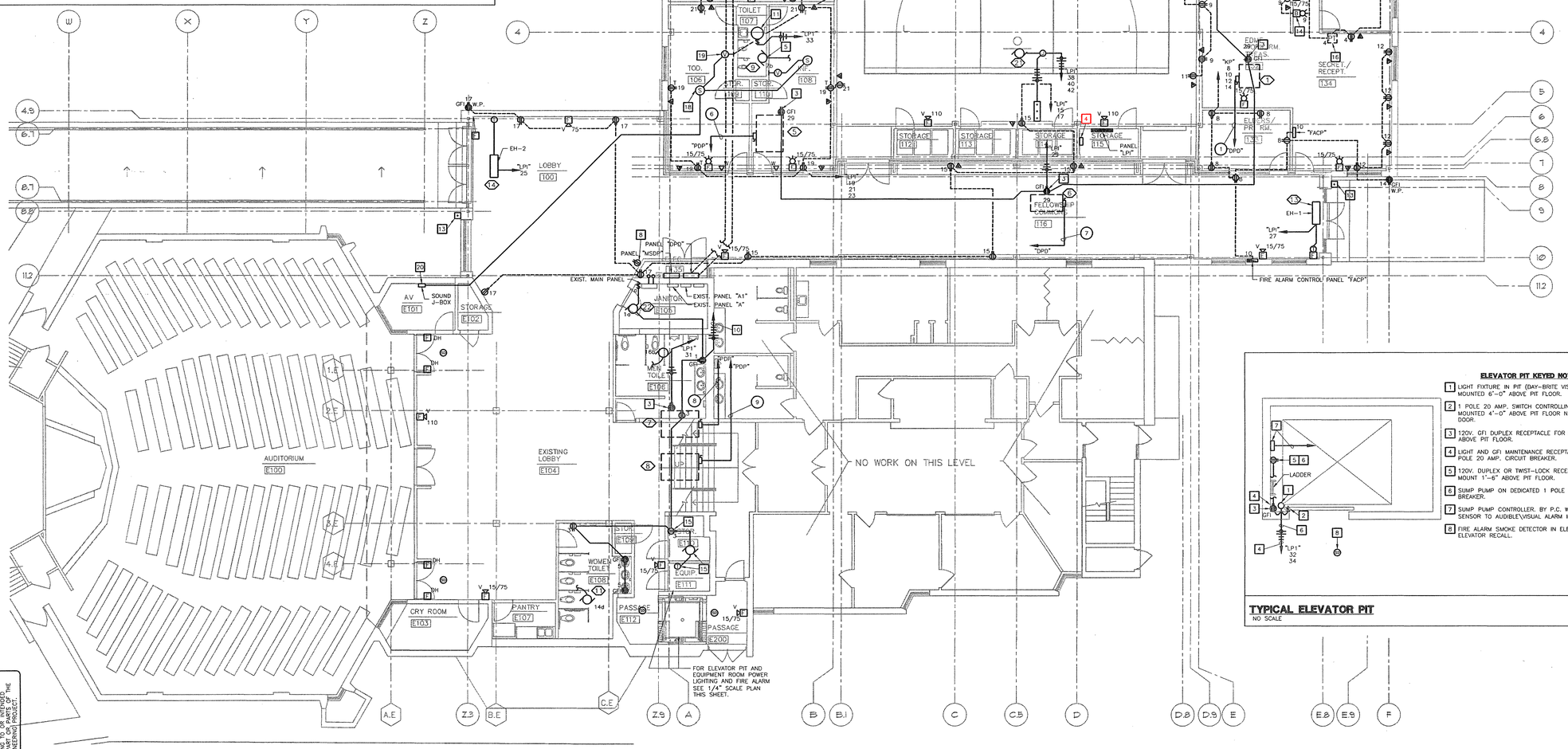

ELECTRICAL KEYED NOTES:

1. OUTLET LOCATED IN BOX WITH LIGHT SWITCH.
2. TELEPHONE TERMINAL BOARD (4'x8')
3. 120 VOLT GFI DUPLEX RECEPTACLE WITH W.P. COVER PLATE FOR HVAC MAINTENANCE.
4. TIME SWITCH 'A' INTERMATIC ET70415CR.
5. CONNECT EXHAUST FAN EF-1 TO SWITCHED LIGHTING CIRCUIT.
6. CONNECT EXHAUST FAN EF-2 TO SWITCHED LIGHTING CIRCUIT. SEE WIRING DIAGRAM SHEET E1.2.
7. CONNECT EXHAUST FAN EF-3 TO SWITCHED LIGHTING CIRCUIT.
8. 120 VOLT DUPLEX RECEPTACLE SHALL REMAIN.
9. PROVIDE SWITCH AND 120 VOLT DUPLEX RECEPTACLE IN SAME 2 GANG BOX.
10. CONNECT TO 1P 20AC BE MADE SPARE BY DEMOLITION. CIRCUIT NUMBERS ARE FOR REFERENCE ONLY.
11. CONNECT TO 2,000 WATT ELECTRIC WATER HEATER EWH-1 ABOVE CEILING.
12. NOT USED.
13. NUTONE PB9 LWH WIRELESS PUSHBUTTON.
14. NUTONE LA20WH 3 DOOR CHIME.
15. RECONNECT EXISTING EXHAUST FAN TO 120 VOLT CIRCUIT. INSTALL AND WIRE THERMOSTAT FURNISHED BY M.C.
16. LATHEM DWA-S PROGRAM TIMER.
17. WHEELOCK (43 T-66 115 S) PROGRAM BELL.
18. PROVIDE CEILING INTERCOM SPEAKER AND CONDUIT SPEAKER SHALL MATCH EXISTING.
19. PROVIDE SPEAKER VOLUME CONTROL AND CONDUIT.
20. PROVIDE INTERCOM BOX FOR INTERCOM CONDUIT. INTERCOM WIRE WILL BE PROVIDED BY OWNER.

ELEVATOR PIT KEYED NOTES:

1. LIGHT FIXTURE IN PIT (DAY-BRITE VIS-150-1-12-W) TO BE MOUNTED 6'-0" ABOVE PIT FLOOR.
2. 1 POLE 20 AMP. SWITCH CONTROLLING PIT LIGHT. FIXTURE TO BE MOUNTED 4'-0" ABOVE PIT FLOOR NEAR LADDER OR NEAR PIT DOOR.
3. 120V. GFI DUPLEX RECEPTACLE FOR MAINTENANCE. MOUNT 4'-0" ABOVE PIT FLOOR.
4. LIGHT AND GFI MAINTENANCE RECEPTACLE FOR PIT ON DEDICATED 1 POLE 20 AMP. CIRCUIT BREAKER.
5. 120V. DUPLEX OR TWIST-LOCK RECEPTACLE FOR SUMP PUMP. MOUNT 1'-6" ABOVE PIT FLOOR.
6. SUMP PUMP ON DEDICATED 1 POLE 20 AMP. GFI CIRCUIT BREAKER.
7. SUMP PUMP CONTROLLER. BY P.C. WIRE FROM CONTROLLER OIL SENSOR TO AUDIBLE\VISUAL ALARM IN ELEVATOR MACHINE ROOM.
8. FIRE ALARM SMOKE DETECTOR IN ELEVATOR VESTIBULE FOR ELEVATOR RECALL.

TYPICAL ELEVATOR PIT
NO SCALE

ELECTRICAL FIRST FLOOR PLAN - POWER AND SYSTEMS
SCALE: 1/8" = 1' - 0"

Fletcher:: Architects, Inc.
ARCHITECTURE ■ PLANNING ■ INTERIORS
1906 NORTH SIGNAL HILLS DRIVE
KIRKWOOD, MO. 63122
TEL. (314) 965-6333
FAX. (314) 965-8997
info@fletcher-architects.com

CONSULTANTS

CIVIL ENGINEER:
FRONTENAC ENGR. GROUP, INC.
16 SUNNEN DR.
ST. LOUIS, MO 63143
PHONE (314) 644-2200
FAX (314) 644-0645

STRUCT. ENGINEER:
ABS CONSULTING
1844 LACKLAND HILLS PARKWAY
ST. LOUIS, MO 63146
PHONE (314) 994-7007
FAX (314) 994-0722

M.E.P. ENGINEER:
SSC ENGINEERING
550 SPIRIT OF ST. LOUIS BLVD.
CHESTERFIELD, MO 63005
PHONE (636) 530-7770
FAX (636) 530-7877

HARDWARE CONSULTANT
8710
5555 PIERRE CT.
ST. LOUIS, MO 63128
PHONE (314) 487-7776
FAX (314) 842-2242

KITCHEN CONSULTANTS
THE GEGER GROUP
3501 WATSON ROAD
ST. LOUIS, MO 63139
PHONE (314) 645-2987
FAX (314) 645-3208

LANDSCAPE ARCHITECT
AUSTIN TAO AND ASSOC.
2101 LOCUST, 2ND. FLOOR
ST. LOUIS, MO 63103
PHONE (314) 436-3999
FAX (314) 436-9130

INTERIOR DESIGN
O'DOOLE DESIGN ASSOC.
124 WEST JEFFERSON
KIRKWOOD, MO 11822
PHONE (314) 909-1905
FAX (314) 909-1906

PROJECT:
ADDITION AND RENOVATIONS TO
McKnight Road
Church of Christ
2515 SOUTH MCKNIGHT ROAD
ST. LOUIS, MO 63124

THE SEAL AND SIGNATURE APPLY ONLY TO THE DOCUMENT TO WHICH THEY ARE AFFIXED, AND ME EXPRESSLY DISCLAIM ANY RESPONSIBILITY FOR ALL OTHER PLANS, SPECIFICATIONS, ESTIMATES, REPORTS, OR INSTRUMENTS RELATING TO OR INTENDED TO BE USED FOR ANY PART OR PARTS OF THE ARCHITECTURAL OR ENGINEERING PROJECT.

COPYRIGHT 2002 FLETCHER ARCHITECTS, INC.

NO	DATE	REVISIONS
	00/00/01	ADDENDUM #0

PROJECT NO. 2001229
DRAWN BY: JWW
CHECKED BY: CF
DATE: NOVEMBER 1, 2002
SHEET NO. **E1.3**

CONSTRUCTION/BID DRAWINGS

SSC Swim, Schuchat, & Cornett Engineering, Inc.
18207 Edison Avenue Chesterfield, Missouri 63005 (636) 530-7770 Fax# (636) 530-7877

J:\2001\01Revit\2001E1.3.dwg

GENERAL NOTES:

1. ALL FUSES SHALL BE BUSSMAN LPN UNLESS OTHERWISE NOTED.

ELECTRICAL KEYED NOTES:

1. UTILITY TRANSFORMER. SEE SITE PLAN.
2. PROVIDE GROUNDING PER 1999 NEC.
3. THE EXISTING 600 AMP MAIN SERVICE HAS TWO WEATHER HEADS WITH 350 KC MIL INCOMING CABLES EACH SPLICE TO THE EXISTING CABLES TO BACKFEED THE OLD PANEL FROM THE NEW.
4. REMOVE ALL GROUNDING APPARATUS FROM EXISTING MAIN SERVICE PANELBOARD.

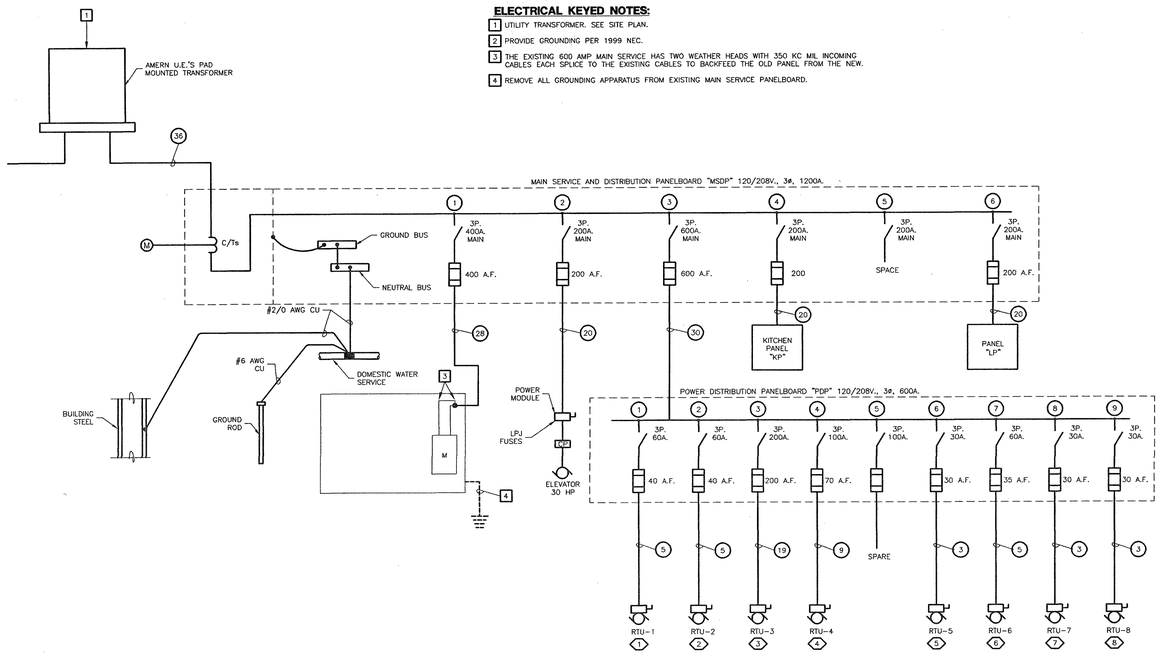

FEEDER SCHEDULE

PLAN MARK	AMPERAGE	FEEDER SIZE
1	20A.	3 #12 & #12G., 3/4"
2	20A.	4 #12 & #12G., 3/4"
3	30A.	3 #10 & #10G., 3/4"
4	30A.	4 #10 & #10G., 3/4"
5	50A.	3 #8 & 1 #10G., 3/4"C.
6	50A.	4 #8 & 1 #10G., 3/4"C.
7	60A.	3 #6 & 1 #10G., 3/4"C.
8	60A.	4 #6 & 1 #10G., 1"C.
9	80A.	3 #4 & 1 #8G., 1-1/4"C.
10	80A.	4 #4 & 1 #8G., 1-1/4"C.
11	100A.	3 #3 & 1 #8G., 1-1/4"C.
12	100A.	4 #3 & 1 #8G., 1-1/4"C.
13	125.A	3 #1 & 1 #6G., 1-1/2"C.
14	125A.	4 #1 & 1 #6G., 1-1/2"C.
15	150A.	3 #1/0 & 1 #6G., 1-1/2"C.
16	150A.	4 #1/0 & 1 #6G., 1-1/2"C.
17	175A.	3 #2/0 & 1 #6G., 2"C.
18	175A.	4 #2/0 & 1 #6G., 2"C.
19	200A.	3 #3/0 & 1 #6G., 2"C.
20	200A.	4 #3/0 & 1 #6G., 2"C.
21	225A.	3 #4/0 & 1 #4G., 2"C.
22	225.A	4 #4/0 & 1 #6G., 2"C.
23	250A.	3-250 MCM & 1 #4G., 2-1/2"C.
24	250A.	4-250 MCM & 1 #4G., 2-1/2"C.
25	300A.	3-350 MCM & 1 #4G., 3"C.
26	300A.	4-350 MCM & 1 #4G., 3"C.
27	400A.	3-500 MCM & 1 #3G., 3"C.
28	400A.	4-500 MCM & 1 #3G., 4"C.
29	600A.	TWO SETS OF 3-350 MCM & 1 #1G., 3"C
30	600A.	TWO SETS OF 4-350 MCM & 1 #1G., 4"C
31	800A.	TWO SETS OF 3-500 MCM & 1 #1/0G., 3"C
32	800A.	TWO SETS OF 4-500 MCM & 1 #1/0G., 4"C
33	1000A.	THREE SETS OF 3-500 MCM & 1 #2/0G., 3"C
34	1000A.	THREE SETS OF 3-500 MCM & 1 #2/0G., 4"C
35	1200A.	FOUR SETS OF 3-350MCM & 1 #3/0G., 3"C.
36	1200A.	FOUR SETS OF 4-350 MCM & 1 #3/0G., 4"C.
37	1600A.	FOUR SETS OF 3-600 MCM & 1 #4/0G., 4"C.
38	1600A.	FOUR SETS OF 4-600 MCM & 1 #4/0G., 4"C.
39	2000A.	SIX SETS OF 4-500 MCM & 1-250G., 3"C.
40	2000A.	SIX SETS OF 4-500 MCM & 1-250G., 4"C.

LIGHTING FIXTURE SCHEDULE

SYMBOL	MANUFACTURER CATALOG NO.	VOLTAGE	LAMP DATA QTY.	LAMP DATA DESCRIPTION	MOUNTING	FINISH	REMARKS
A2	DAY-BRITE	120	2	32W. T8	RECESSED	WHITE	2'x4' RECESSED FLUORESCENT
–	2SPG232-FS-12-UNV-1/2EB	–	–	–	–	–	LENSED TROFFER
A3	DAY-BRITE	120	3	32W. T8	RECESSED	WHITE	2'x4' RECESSED FLUORESCENT
–	2SPG332-FS-12-UNV-1/3EB	–	–	–	–	–	LENSED TROFFER
A4	DAY-BRITE	120	4	32W. T8	RECESSED	WHITE	2'x4' RECESSED FLUORESCENT
–	2SPG432-FS-12-UNV-1/4EB	–	–	–	–	–	LENSED TROFFER
B2	DAY-BRITE	120	2	32W. T8	RECESSED	WHITE	1'x4' RECESSED FLUORESCENT
–	1DG232-FS-12-UNV-1/2EB	–	–	–	–	–	LENSED TROFFER
C2	DAY-BRITE	120	2	31W. T8	RECESSED	WHITE	2'x2' RECESSED FLUORESCENT
–	2SPG31U6-FS-12-UNV-1/2EB	–	–	–	–	–	LENSED TROFFER
D2	DAY-BRITE	120	2	32W. T8	SURFACE	WHITE	14"x4' WRAP-A-ROUND
–	OWW 232-UNV-1/2EB	–	–	–	–	–	FLUORESCENT FIXTURE
E1	DAY-BRITE	120	1	70W. M.H.	SURFACE	WHITE	SURFACE MOUNTED CANOPY LIGHT
–	DSS070M120-DPM	–	–	–	–	–	–
F1	INTREPID	120	9	LAMPS	CEILING	WHITE	HIGH BAY FLUORESCENT
–	PMD-9/368X-120-ERS/EDM-PML-HK	–	–	–	HOOK	–	3 LEVEL SWITCHING
–	–	–	–	–	–	–	USE LUTRON ECO-10 BALLAST
G1	DAY-BRITE	208	1	250W.	POLE	BRONZE	SHOE BOX FIXTURE
–	SBX-250M-12-MC3-MCLTA10S/	–	–	METAL HALIDE	–	–	ON 16' POLE
–	SQS415G11-D12/BRZ	–	–	–	–	–	–
G2	DAY-BRITE	208	1	250W.	POLE	BRONZE	FLOOD LIGHT MTD. ON TYPE G1
–	FLI-250M-MT-1SFBRZ	–	–	METAL HALIDE	–	–	POLE. SEE DETAIL ON DWG E0.1
X	EMERGI-LITE	120	–	LED	SURFACE	WHITE	UNIVERSAL
–	ELXN-400-R	–	–	–	–	W/ RED	–
–	–	–	–	–	–	LETTERS	–
RA	OMEGA OM6250	120	1	250W.	RECESS	WHEAT	RECESSED INCANDESCENT
–	PAR 38-WT	–	–	PAR 38	–	–	DOWNLIGHT
TA	OMEGA OM82H2	120	2	26W.	RECESS	WHEAT	COMPACT FLUORESCENT
–	QPL-WT	–	–	QU-T4	–	–	DOWNLIGHT
EE	DAY-BRITE	120	1	150W.	SURFACE	ALUM.	DIE CAST CEILING MOUNTED
–	V1S1501-12-C-6	–	–	A-21	CLG.	–	INCANDESCENT FIXTURE
FF	GARDCO	120	1	175W.	SPIRAL	DARK	MOUNT ON SPIRAL 10'-0"
–	DF7-HFL-175MH-120-BRP	–	–	METAL HALIDE	–	BRONZE	ABOVE PAVEMENT
GG	GARDCO	120	1	39W.	SPIRAL	DARK	MOUNT ON SPIRAL 12'-0"
–	DSP5-U-PAR 30-BRP	–	–	METAL HALIDE	–	BRONZE	ABOVE PAVEMENT
HH	SE' LUX M10	120	–	32W. T8	PENDANT	WHITE	MOUNT 8'-0" A.F.F. FLOOR TO
–	1T8-MP-C-XXX-WH-120	–	–	–	–	–	BOTTOM OF FIXTURE

NOTE:
1. EQUAL LIGHT FIXTURES BY HUBBELL AND COOPER WILL BE ACCEPTED.

ELECTRICAL SYMBOLS LEGEND

LIGHTING FIXTURES

AA3	FLUORESCENT FIXTURE – CEILING MOUNTED. ALPHA-NUMERIC DESIGNATION DENOTES TYPE; SEE LIGHTING FIXTURE SCHEDULE FOR DESCRIPTION.
BB2	FLUORESCENT FIXTURE – AS ABOVE – WALL MOUNTED 84" AFF (U.N.O).
C	INCANDESCENT, FLUORESCENT OR H.I.D. FIXTURE – AS ABOVE – CEILING MOUNTED OR PENDANT MOUNTED TO HEIGHT INDICATED.
D	WALL MOUNTED FIXTURE – AS ABOVE – 78" A.F.F. (U.N.O.).
	EXIT LIGHT – CEILING MOUNTED; WALL MOUNT 7'-6" AFF OR ABOVE DOOR SHADED PORTION INDICATES FACE; WITH DIRECTIONAL ARROW(S) AS INDICATED. FIXTURE TYPE "X" (U.N.O.).
	COMBINATION EXIT LIGHT WITH EMERGENCY LIGHTING HEADS. FIXTURE TYPE "X1" (U.N.O.).
	EMERGENCY LIGHT – BATTERY OPERATED – WALL MOUNTED 84" AFF (U.N.O.). FIXTURE TYPE "Y" (U.N.O.).
	BOLLARD FIXTURE.
	LIGHT POLE WITH SINGLE HEAD LUMINAIRE.
	LIGHT POLE WITH TWO LUMINAIRES (OR MORE AS INDICATED).
	SHADING DENOTES EMERGENCY FIXTURE.
1a,b NL	FIXTURE CIRCUITRY NOTATION: 1 – CIRCUIT NUMBER TO WHICH FIXTURE IS CONNECTED a,b – LETTER(S) OF SWITCH(ES) CONTROLLING FIXTURE NL – NIGHT LIGHT (UNSWITCHED CIRCUIT)

WIRING DEVICES

^{a}	SINGLE POLE SWITCH – "a" INDICATES SWITCH LEG – MOUNT 48" AFF.
^{3}	THREE-WAY SWITCH – AS ABOVE.
TS	TIME SWITCH – MOUNT 60" AFF.
PC	PHOTOCELL MOUNTED IN WP OUTLET BOX LOCATED ON ROOF, FACING NORTH, (U.N.O.).
MC	LIGHTING CONTACTOR FOR NUMBER OF CIRCUITS AS INDICATED ON PLAN.
	JUNCTION BOX OR POINT OF CONNECTION – MOUNT 18" AFF OR AT HEIGHT REQUIRED BY RESPECTIVE EQUIPMENT ITEM MANUFACTURER.
	DUPLEX RECEPTACLE – MOUNT 18" AFF.
	DOUBLE DUPLEX RECEPTACLE – AS ABOVE.
	DUPLEX RECEPTACLE AS ABOVE – SPLIT WIRED, TOP HALF SWITCHED .
	DUPLEX 6" ABOVE COUNTER OR WALL HUNG LAVATORY.
	SPECIAL PURPOSE OUTLET – MOUNT 18" AFF.

MOTORS AND EQUIPMENT

30/20/3	DISCONNECT SWITCH (FUSED OR NON-FUSED AS INDICATED) – MOUNT 60" AFF. 30/20/3 INDICATES SWITCH AMPS/FUSE AMPS/POLES.
	MOTOR STARTER, NEMA SIZE TO SUIT EQUIPMENT SERVED, WITH HAND-OFF-AUTO SELECTOR SWITCH, (U.N.O.).
	COMBINATION MOTOR STARTER, AS ABOVE AND DISCONNECT SWITCH.
30/2 ECB	ENCLOSED CIRCUIT BREAKER; AMPS/POLES RATING AS INDICATED.
^{M}	MANUAL MOTOR STARTER WITH OVERLOAD PROTECTION – MOUNT ON SIDE OF UNIT OR AT 48" AFF.
CP	CONTROL PANEL FOR EQUIPMENT ITEM INDICATED ON PLAN.
VFD	VARIABLE FREQUENCY DRIVE FOR EQUIPMENT ITEM INDICATED ON PLAN.
	MULTIPLE PUSH BUTTONS – MOUNT 48" AFF, AS INDICATED (U.N.O.).
	ELECTRIC MOTOR.
	NEW BRANCH CIRCUIT PANELBOARD – MOUNT TOP 78" AFF.
	EXISTING BRANCH CIRCUIT PANELBOARD – MOUNT TOP 78" AFF.
MDP	SWITCHBOARD, DISTRIBUTION PANEL OR MOTOR CONTROL CENTER.
	DRY-TYPE TRANSFORMER.
	KILOWATT HOUR METER BASE.

CIRCUITRY DESIGNATIONS

	BRANCH CIRCUITRY. CONCEALED IN WALLS OR ABOVE CEILINGS. ARROW INDICATES HOME RUN TO PANEL. SHORT SLASH MARKS INDICATE "HOT" WIRES, LONG SLASH MARK INDICATES "NEUTRAL" WIRE, LONG SLASH WITH SOLID CIRCLE INDICATES GREEN GROUNDING CONDUCTOR.
	BRANCH CIRCUITRY AS ABOVE, CONCEALED IN FLOOR SLAB OR UNDERGROUND.
	BRANCH CIRCUITRY AS ABOVE, EXPOSED ON WALLS OR STRUCTURE.
	CIRCUITRY UP – CIRCUITRY DOWN.

FIRE ALARM SYSTEM

FACP	FIRE ALARM CONTROL PANEL – MOUNT TOP 72" AFF.
FAAP	FIRE ALARM ANNUNCIATOR PANEL – MOUNT TOP 72" AFF.
F	MANUAL PULL STATION – MOUNT 48" AFF.
	SMOKE DETECTOR – CEILING MOUNTED.
SD	DUCT MOUNTED SMOKE DETECTOR WITH SAMPLING TUBES.
FA	DUCT MOUNTED SMOKE DETECTOR'S REMOTE ANNUNCIATOR LAMP AND TEST SWITCH-MOUNT ON CEILING, (U.N.O.).
	HEAT DETECTOR – CEILING MOUNTED (U.N.O.).
F 15/75	VISUAL FLASHER – MOUNT 80" AFF TO BOTTOM OF FLASHER; (NUMERALS INDICATE CANDELLA).
F V	HORN – MOUNT 90" AFF; V DENOTES COMBINATION VISUAL FLASHER/HORN.
F R	INTERFACE RELAY FOR CODE REQUIRED ACTION, OR AS NOTED ON PLANS; SEE SPECIFICATION.
F CM	CONTROL MODULE FOR CODE REQUIRED ACTION; SEE SPECIFICATION.
F MM	MONITOR MODULE FOR CODE REQUIRED ACTION, OR AS NOTED ON PLANS; SEE SPECIFICATION.

AUXILIARY SYSTEMS

	SPEAKER – CEILING MOUNTED.
	SPEAKER – WALL MOUNT 84" AFF.
IC	INTERCOM STATION – MOUNT 48" AFF.
	TELEPHONE OUTLET – MOUNT 18" AFF; F INDICATES FAX MACHINES, W INDICATES WALL MOUNT 54" AFF, P INDICATES WALL MOUNT FOR PAY PHONE.
	DATA OUTLET – MOUNT 18" AFF.
	COMBINATION TELEPHONE AND DATA OUTLET – MOUNT 18" AFF.
TTB	TELEPHONE TERMINAL BOARD – 3/4" PLYWOOD, 4' x 8' (U.N.O.).
TTC	TELEPHONE TERMINAL CABINET 24" x 36" x 6" (U.N.O.) WITH PLYWOOD BACK AND HINGED DOOR WITH KEY LOCK.
TV	T.V. OUTLET – MOUNT 18" AFF U.N.O.
C	CLOCK OUTLET – MOUNT 78" AFF U.N.O.

ABBREVIATIONS

AFF	ABOVE FINISHED FLOOR.
EC	ELECTRICAL CONTRACTOR.
EM	EMERGENCY.
EWC	ELECTRIC WATER COOLER. ROUGH-IN RECEPTACLE INCONSPICUOUSLY; COORDINATE WITH PC.
EWH	ELECTRIC WATER HEATER.
EX	EXISTING.
FPC	FIRE PROTECTION CONTRACTOR.
FSS	FUSIBLE SAFETY SWITCH.
GC	GENERAL CONTRACTOR.
GFI	GROUND FAULT CIRCUIT INTERRUPTER TYPE DEVICE, (U.N.O.).
H.I.D.	HIGH INTENSITY DISCHARGE.
I.G.	ISOLATED GROUND TYPE DEVICE.
KEC	KITCHEN EQUIPMENT CONTRACTOR.
MAX	MAXIMUM.
MC	MECHANICAL CONTRACTOR.
MFR	MANUFACTURER.
MIN	MINIMUM.
NF	NON-FUSED SWITCH.
PC	PLUMBING CONTRACTOR.
T	TAMPER PROOF TYPE DEVICE.
U.N.O.	UNLESS NOTED OTHERWISE.
WP	WEATHERPROOF.

MISCELLANEOUS

XXX X-X	MECHANICAL EQUIPMENT ITEM IDENTIFICATION PER EQUIPMENT SCHEDULE ON MECHANICAL DRAWINGS.
	MISCELLANEOUS EQUIPMENT NUMBER. SEE MISCELLANEOUS EQUIPMENT SCHEDULE.

Fletcher:: Architects, Inc.

ARCHITECTURE ■ PLANNING ■ INTERIORS
1906 NORTH SIGNAL HILLS DRIVE
KIRKWOOD, MO. 63122
TEL. (314) 965-6333
FAX. (314) 965-8997
info@fletcher-architects.com

CONSULTANTS

CIVIL ENGINEER:
FRONTENAC ENGR. GROUP, INC.
16 SUNNEN DR.
ST. LOUIS, MO 63143
PHONE (314) 644-2200
FAX (314) 644-0649

STRUCT. ENGINEER:
ABS CONSULTING
1844 LACKLAND HILLS PARKWAY
ST. LOUIS, MO 63146
PHONE (314) 994-7007
FAX (314) 994-0722

M.E.P. ENGINEER:
SSC ENGINEERING
550 SPIRIT OF ST. LOUIS BLVD.
CHESTERFIELD, MO 63005
PHONE (636) 530-7770
FAX (636) 530-7877

HARDWARE CONSULTANT
8710
5555 PIERRE CT.
ST. LOUIS, MO 63128
PHONE (314) 487-7776
FAX (314) 842-2242

KITCHEN CONSULTANTS
THE GEIGER GROUP
3501 WATSON ROAD
ST. LOUIS, MO 63139
PHONE (314) 645-2987
FAX (314) 645-3208

LANDSCAPE ARCHITECT
AUSTIN TAO AND ASSOC.
2101 LOCUST, 2ND. FLOOR
ST. LOUIS, MO 63103
PHONE (314) 436-3999
FAX (314) 436-9130

INTERIOR DESIGN
O'TOOLE DESIGN ASSOC.
124 WEST JEFFERSON
KIRKWOOD, MO 63122
PHONE (314) 909-1905
FAX (314) 909-1906

PROJECT:
ADDITION AND RENOVATIONS TO
McKnight Road Church of Christ
2515 SOUTH MCKNIGHT ROAD
ST. LOUIS, MO 63124

THE SEAL AND SIGNATURES APPLY ONLY TO THE DOCUMENT TO WHICH THEY ARE AFFIXED, AND THE ARCHITECT EXPRESSLY DISCLAIMS ANY RESPONSIBILITY FOR ALL OTHER PLANS, SPECIFICATIONS, ESTIMATES, REPORTS, OR OTHER DOCUMENTS OR INSTRUMENTS RELATING TO OR INTENDED TO BE USED FOR ANY PART OR PARTS OF THE ARCHITECTURAL OR ENGINEERING PROJECT.

THE SEAL AND SIGNATURES APPLY ONLY TO THE DOCUMENT TO WHICH THEY ARE AFFIXED, AND WE EXPRESSLY DISCLAIM ANY RESPONSIBILITY FOR ALL OTHER PLANS, SPECIFICATIONS, ESTIMATES, REPORTS, OR OTHER DOCUMENTS OR INSTRUMENTS RELATING TO OR INTENDED TO BE USED FOR ANY PART OR PARTS OF THE PROJECT.

COPYRIGHT 2002 FLETCHER ARCHITECTS, INC.

NO	DATE	REVISIONS
	00/00/01	ADDENDUM #0

PROJECT NO. 2001239
DRAWN BY: JWW
CHECKED BY: BG
DATE: NOVEMBER 1, 2002

SHEET NO. E2.1

CONSTRUCTION/BID DRAWINGS

SSC Swim, Schuchat, & Cornett Engineering, Inc.
18207 Edison Avenue Chesterfield, Missouri 63005
(636) 530-7770 Fax# (636) 530-7877

J:\2001\01\dwg\e013952.dwg